Chapter 2 - Orbit Overview

Contents

Sub-Section		Page
2.0	Contents	1
2.1	Introduction to Chapter 2	2
2.2	NIMS Science Objectives	3-4
2.3	NIMS Calibrations	4
2.4	Early Data Return	4
2.5	E11 Playback	4
2.6	NIMS Time-ordered Listing	5-7
2.7	NIMS E11 Observation Geometry Plot	8
2.8	NIMS Satellite Observation Geometry Plot	9
2.90	NIMS Jupiter Observation Geometry Plot	10
2.10	NIMS Calibration Geometry Plot	11
2.11	NIMS Reload Geometry Plot	12
2.12	NIMS E11 Input Spreadsheet	13-14
2.13	NIMS E11 Resource Usage Spreadsheets	15-18
2.14	NIMS E11 Observing Geometry Table	19-22
2.15	E11 Tapemap	23-27
2.16	E11 Playback Schedule	28-33
2.17	NIMS E11 Mosaic Summary	34-41

Introduction to Chapter 2

This chapter gives an overview of the NIMS observations in the E11 Orbit.

The text on pages 3 and 4 summarizes the NIMS science objectives for E11. The NIMS calibrations are discussed on page 4. Early data return and E11 playback are also discussed on page 4.

The table on pages 5 through 7 is a time-ordered listing of the NIMS Oapels for E11.

The plot on page 8 shows the geometry of the NIMS E11 observations using a north trajectory pole view projection. The plots on pages 9 and 10 show the geometry of the NIMS Satellite and Jupiter observations. The plot on page 11 shows the geometry of the NIMS E11 calibrations. The plot on page 12 shows the geometry of the NIMS RAM Reloads and MROs.

The spreadsheet on pages 13 through 14 summarizes the various inputs for the NIMS E11 Observations. The spreadsheet on pages 15 through 18 summarizes the resource usage for the NIMS E11 observations.

The table on pages 19 through 22 lists various NIMS E11 observing parameters: target latitude/longitude, range, cone angle, incidence angle (light), emission angle (view) and phase angle.

The tapemap on pages 23 through 27 shows the placement of the E11 observations on the spacecraft's tape recorder. The NIMS observation names are written with a larger type.

The timeline on pages 28 through 33 shows the preliminary E11 playback schedule.

The NIMS E11 mosaic designs are summarized on pages 34 through 41 in time-order.

NIMS E11 SCIENCE OVERVIEW

Jupiter Science

The main thrust for the NIMS atmospheric observation plan in E11 is the Brown Barge feature. NIMS will observe the Brown Barge at various phase angles which include 94, 42, 20, 72, 114, 125 and 135 degrees phase. The Brown Barge's location prediction is 52 degrees West longitude, 14 degrees North latitude. The Brown Barge uncertainty is approximately 40-65 degrees West longitude. Furthermore, two 5 and 3 micron observations will observe the Brown Barge feature. Moreover, one sub-spectra and one full spectral observation are planned in which each will acquire data at 20 degrees phase. In addition, three real-time observations are planned to observe the Brown Barge. Two of the real-time observations will observe the Brown Barge at 42 degrees phase and the last real-time observation will observe the Brown Barge at 20 degrees phase. In addition, six large Cylindrical mosaics of Jupiter at phase angle of nearly 90 degrees are planned. The entire Cylindrical map campaign covers 90-360 degrees West longitude. A separate observation is the North-South stripe which will cover the thermal wavelengths from 4.2786 to 5.2198 microns from pole to pole. Other separate observations include two ride-along observations with UVS in which both instruments will observe the Io footprint.

Io Science

The NIMS Io observation campaign consists of four CHEMIS observations which will search for new chemical species and monitor changes in SO2 distribution. Three VOLCAN observations are planned which will monitor variations in volcanic activity of selected regions (i.e. Loki, Pelee, Kanehekili) using selected wavelengths. INHRSPEC is a high spatial and spectral resolution observation of Io's dayside. INNSPEC is a nightside, high resolution observation which will monitor activity of Io's hotspots at high spatial and spectral resolution. One INTHRMAL observation is planned and is designed to observe the nightside to map hotspots, thermal anomalies and outbursts on Io's surface.

NIMS E11 SCIENCE OVERVIEW

Europa Science

The E11 NIMS Europa observing campaign begins with three distant Europa observations. All three distant observations occur beyond fifteen Jupiter radii (Rj) at 20 hours (M20HR), 17 hours (M17HR) and 15 hours (M15HR) before Europa closest approach. Each distant observation will have two scans. The first scan of each observation will be recorded MPW in gain state 4 and the second scan will be LPU in gain state 3. ENDRKLIT will observe the Pwyll impact crater at -2 degrees South latitude and 225 degrees West longitude. The objective is to observe pull-apart bands and bright and dark plains. This observation has been coordinated with SSI. Also, ENCYCLOD will observe cyclodial and triple bands at 14 degrees North latitude and 225 degrees West longitude. ENCYCLOD has also been coordinated with SSI. ENEURORT is a real-time observation that will observe Europa at 408 wavelengths at closest approach. LEADRT is a ride-along observation with SSI that will study the leading hemisphere targetting the region at 90 degrees West longitude. This observation is unique in that the leading hemisphere has never been observed at 90 degrees West longitude. The ride-along observation will also serve as preparation for Europa observations in the I25 orbit of the Galileo Europa Mission (GEM).

Ganymede Science

No Ganymede observations were planned due to poor resolution.

Callisto Science

No Callisto observations were planned.

Calibration

There are six NIMS calibration observations in E11: four darkcals, one RCT cal and one OPCAL. The darkcal observations (HNDARK) measure dark levels in three gain states. The RCT cal (RCTRLT) calibrates NIMS in the thermal bands. The OPCAL calibrates the NIMS grating.

Early Data Return

There are nine realtime observations in E11: 2 instrument health checks of 3 wavelengths (HEALTH), 3 408 wavelength Jupiter Brown Barge observations (RTBRG), 2 408 wavelength Europa observations (EURORT and RTLEAD), one RCT calibration and one OPCAL.

E11 Playback

E11 playback is split into two passes through the tape.

E11 Time-Ordered Listing

OAPEL	Start (UTC)	End (UTC)	Duration
11NNCHOPON01-	97-309/07:06:11	97-309/07:14:17	0/00:08:05
11HNDARK__01-	97-309/07:15:17	97-309/07:22:22	0/00:07:04
11JNBRG53M01-	97-309/16:10:10	97-309/16:17:15	0/00:07:04
11JNBRG53M02-	97-309/17:15:53	97-309/17:42:11	0/00:26:17
11JNBRG09401-	97-309/17:52:17	97-309/18:00:23	0/00:08:05
11JNBRG09402-	97-309/18:25:39	97-309/18:32:44	0/00:07:04
11JNBRG09403-	97-309/18:49:55	97-309/18:57:00	0/00:07:04
11JNBRG09404-	97-309/19:23:17	97-309/19:29:21	0/00:06:04
11NNRELOAD01-	97-309/19:31:23	97-309/19:41:29	0/00:10:06
11JNCYLMOS01-	97-309/20:14:51	97-309/20:28:00	0/00:13:08
11NNRELOAD02-	97-309/21:13:30	97-309/21:23:37	0/00:10:06
11JNCYLMOS02-	97-309/21:48:53	97-309/22:02:02	0/00:13:08
11JNCYLMOS03-	97-309/23:01:41	97-309/23:16:51	0/00:15:10
11NNRELOAD03-	97-309/23:36:04	97-309/23:46:11	0/00:10:06
11JNCYLMOS04-	97-310/00:01:21	97-310/00:15:30	0/00:14:09
11ENM20HR_01-	97-310/00:15:30	97-310/00:38:45	0/00:23:15
11NNRELOAD04-	97-310/01:05:03	97-310/01:15:09	0/00:10:06
11JNCYLMOS05-	97-310/01:32:21	97-310/01:48:31	0/00:16:10
11NNRELOAD05-	97-310/02:14:49	97-310/02:24:55	0/00:10:06
11JNCYLMOS06-	97-310/02:42:07	97-310/02:57:17	0/00:15:10
11ENM17HR_01-	97-310/02:57:17	97-310/03:22:33	0/00:25:16
11ENM15HR_01-	97-310/05:20:51	97-310/05:47:09	0/00:26:17
11NNRELOAD06-	97-310/13:14:03	97-310/13:24:10	0/00:10:06
11JNRTBRG_01-	97-310/13:39:20	97-310/13:53:29	0/00:14:09
11JNBRG04201-	97-310/13:53:29	97-310/14:02:35	0/00:09:06
11JNBRG04202-	97-310/14:02:35	97-310/14:13:33	0/00:10:58
11JNRTBRG_02-	97-310/14:13:34	97-310/14:23:49	0/00:10:15
11JNBRG04203-	97-310/14:29:53	97-310/14:38:59	0/00:09:06

E11 Time-Ordered Listing

OAPEL	Start (UTC)	End (UTC)	Duration
11JNBRG04204-	97-310/15:24:29	97-310/15:33:35	0/00:09:06
11NNLDTEST01-	97-310/16:41:20	97-310/16:45:23	0/00:04:02
11JNBRG04205-	97-310/16:46:23	97-310/16:55:29	0/00:09:06
11NNRELOAD07-	97-310/17:59:11	97-310/18:09:18	0/00:10:06
11NNHEALTH01-	97-310/18:09:18	97-310/18:15:22	0/00:06:04
11ENDRKLIT01-	97-310/18:46:43	97-310/19:02:53	0/00:16:10
11ENEURORT01-	97-310/19:15:01	97-310/19:22:06	0/00:07:04
11ENCYCLOD01-	97-310/19:25:08	97-310/19:43:20	0/00:18:12
11ENLEADRT01+	97-310/20:36:55	97-310/20:56:08	0/00:19:12
11HNDARK__02-	97-310/23:23:45	97-310/23:29:49	0/00:06:04
11JNBRG02001-	97-311/00:12:17	97-311/00:22:24	0/00:10:06
11JNRTBRG_03-	97-311/00:23:25	97-311/00:33:31	0/00:10:06
11JNBRG02002-	97-311/00:44:39	97-311/00:53:45	0/00:09:06
11JNTHRMNS01-	97-311/01:01:50	97-311/01:57:27	0/00:55:36
11JNBRGSUB01-	97-311/01:58:27	97-311/02:27:47	0/00:29:19
11HNDARK__03-	97-311/02:27:47	97-311/02:33:51	0/00:06:04
11JNBRGFUL01-	97-311/02:43:57	97-311/03:13:17	0/00:29:19
11JNBRG02003-	97-311/03:31:29	97-311/03:43:37	0/00:12:08
11JNBRG02004-	97-311/04:22:02	97-311/04:32:09	0/00:10:06
11INCHEMIS01-	97-311/07:42:14	97-311/07:49:19	0/00:07:04
11NNRELOAD08-	97-311/12:49:37	97-311/12:59:43	0/00:10:06
11JNBRG07203-	97-311/13:08:49	97-311/13:20:57	0/00:12:08
11JNBRG07204-	97-311/13:49:16	97-311/13:58:22	0/00:09:06
11JNBRG07205-	97-311/14:21:37	97-311/14:33:45	0/00:12:08
11INCHEMIS02-	97-311/16:09:49	97-311/16:15:53	0/00:06:04
11INVOLCAN01-	97-311/19:10:48	97-311/19:19:54	0/00:09:06
11NNHEALTH03-	97-311/19:19:54	97-311/19:24:57	0/00:05:03
11INCHEMIS03-	97-311/19:45:11	97-311/19:49:13	0/00:04:02

E11 Time-Ordered Listing

OAPEL	Start (UTC)	End (UTC)	Duration
11INVOLCAN02-	97-311/20:10:27	97-311/20:19:33	0/00:09:06
11NNLDTEST02-	97-311/20:20:34	97-311/20:24:37	0/00:04:02
11INVOLCAN03-	97-311/21:09:06	97-311/21:15:10	0/00:06:04
11NNRELOAD09-	97-311/21:21:14	97-311/21:31:21	0/00:10:06
11INHRSPEC01-	97-311/23:40:46	97-311/23:48:51	0/00:08:05
11INNSPEC 01-	97-311/23:48:51	97-311/23:55:56	0/00:07:04
11NNRELOAD10-	97-312/03:19:10	97-312/03:29:16	0/00:10:06
11INCHEMIS04-	97-312/03:29:16	97-312/03:35:20	0/00:06:04
11INTHRMAL04-	97-312/03:35:20	97-312/03:42:25	0/00:07:04
11NNRELOAD11-	97-312/04:47:08	97-312/04:57:15	0/00:10:06
11JNAURVAR01+	97-312/04:57:15	97-312/05:14:26	0/00:17:11
11JNAURVAR02+	97-312/05:18:29	97-312/05:58:55	0/00:40:26
11HNDARK__04-	97-312/08:02:17	97-312/08:09:21	0/00:07:04
11JNBRG11401-	97-312/08:41:43	97-312/08:50:49	0/00:09:06
11JNBRG11402-	97-312/09:12:03	97-312/09:22:09	0/00:10:06
11JNBRG11403-	97-312/09:41:22	97-312/09:53:30	0/00:12:08
11JNBRG11404-	97-312/10:01:35	97-312/10:13:43	0/00:12:08
11NNRELOAD13-	97-312/18:24:07	97-312/18:34:13	0/00:10:06
11JNBRG12501-	97-312/18:52:25	97-312/19:00:31	0/00:08:05
11JNBRG12502-	97-312/19:16:41	97-312/19:27:49	0/00:11:07
11JNBRG12503-	97-312/19:41:58	97-312/19:51:04	0/00:09:06
11JNBRG12504-	97-312/20:02:11	97-312/20:11:17	0/00:09:06
11JNBRG13501-	97-313/04:57:04	97-313/05:05:09	0/00:08:05
11JNBRG13502-	97-313/05:21:20	97-313/05:29:25	0/00:08:05
11JNBRG13503-	97-313/05:46:37	97-313/05:54:42	0/00:08:05
11JNBRG13504-	97-313/06:06:50	97-313/06:14:55	0/00:08:05
11NNCHOPOF01-	97-313/06:19:59	97-313/06:26:03	0/00:06:04
11NNRCTRLT01-	97-314/10:00:13	97-314/23:22:02	0/13:21:48

NIMS E11 OBSERVATIONS

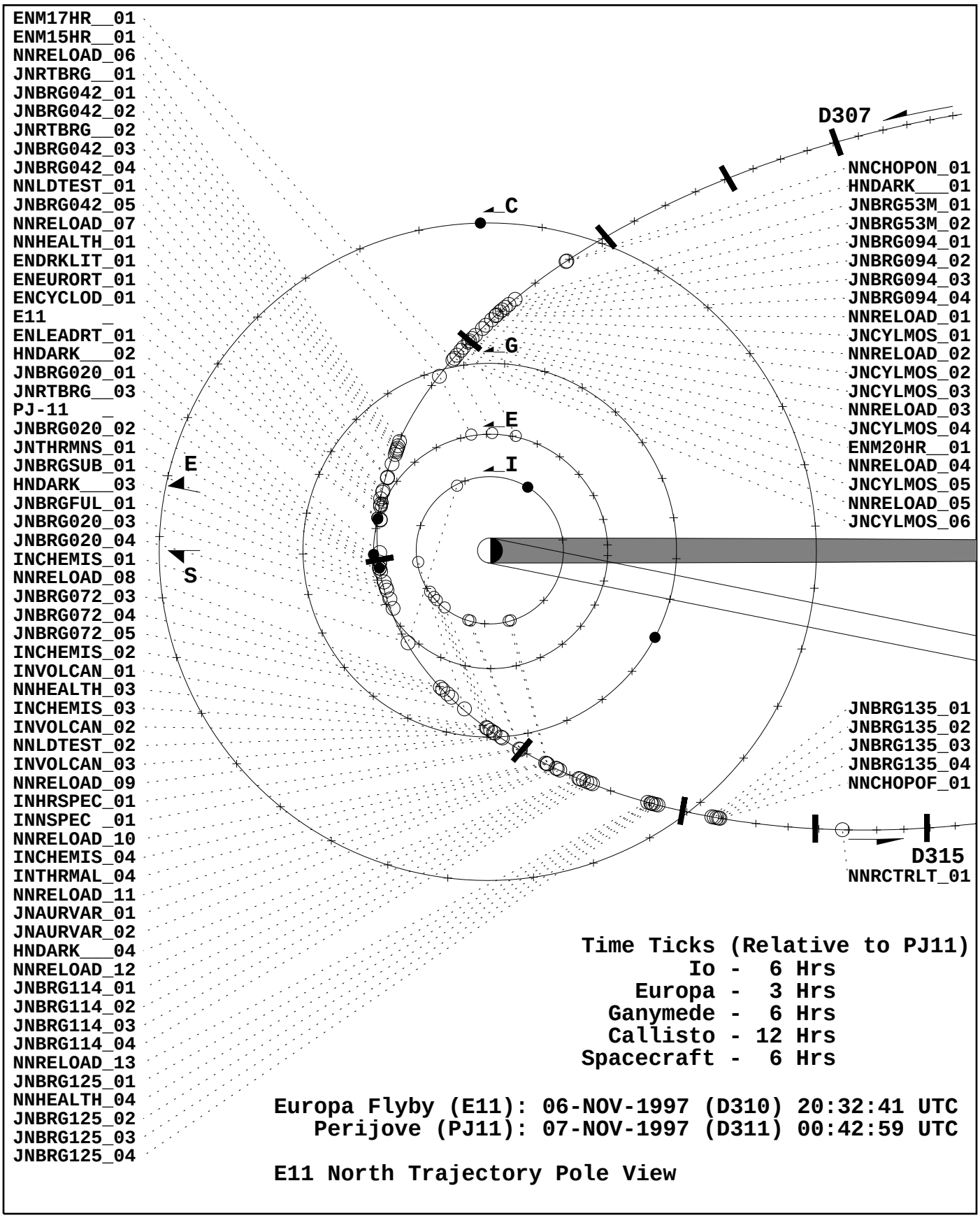

NIMS - FEL - 09/19/97

NIMS E11 JUPITER OBSERVATIONS

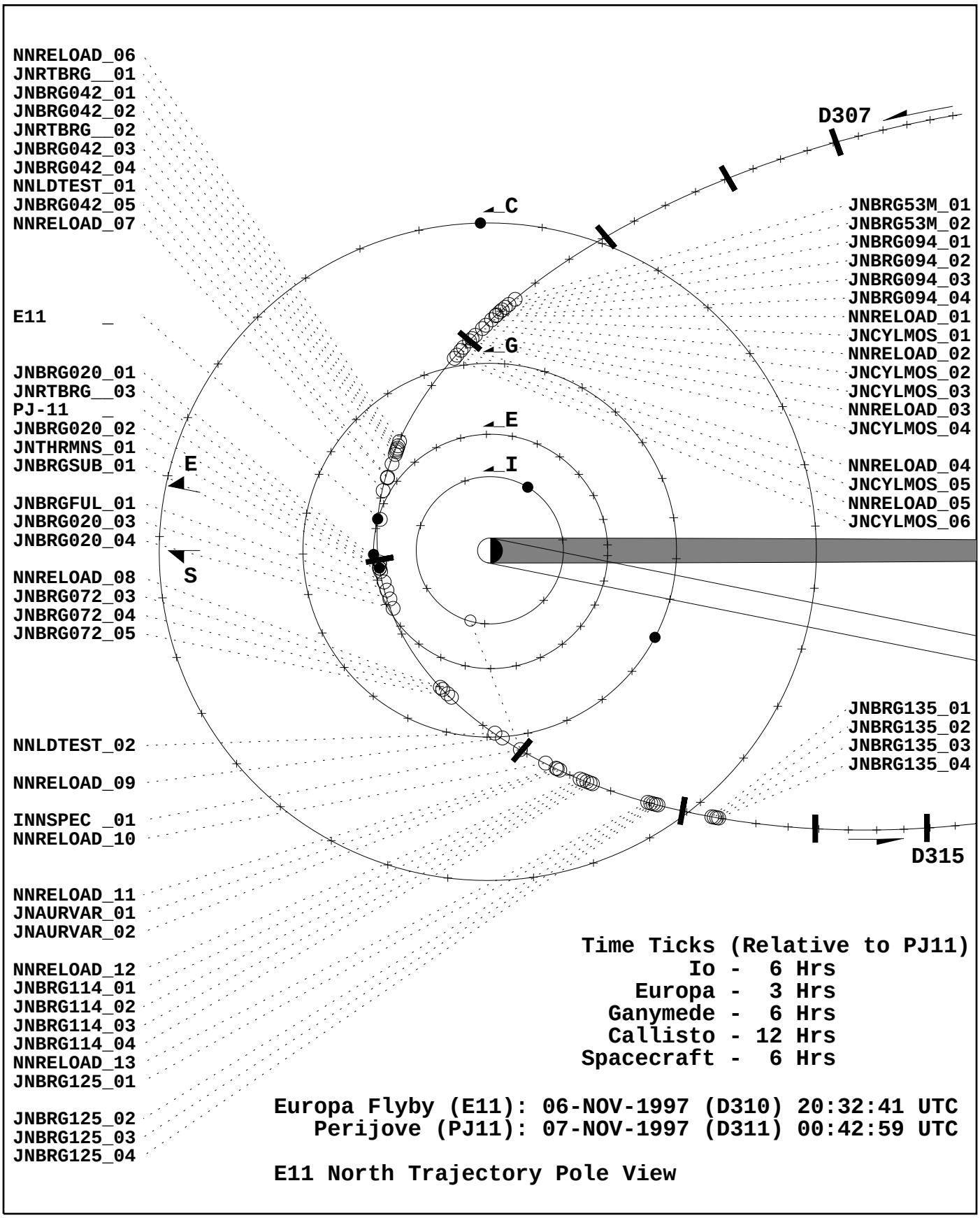

Time Ticks (Relative to PJ11)
Io - 6 Hrs
Europa - 3 Hrs
Ganymede - 6 Hrs
Callisto - 12 Hrs
Spacecraft - 6 Hrs

Europa Flyby (E11): 06-NOV-1997 (D310) 20:32:41 UTC
Perijove (PJ11): 07-NOV-1997 (D311) 00:42:59 UTC

E11 North Trajectory Pole View

NIMS - FEL - 09/19/97

NIMS E11 SATELLITE OBSERVATIONS

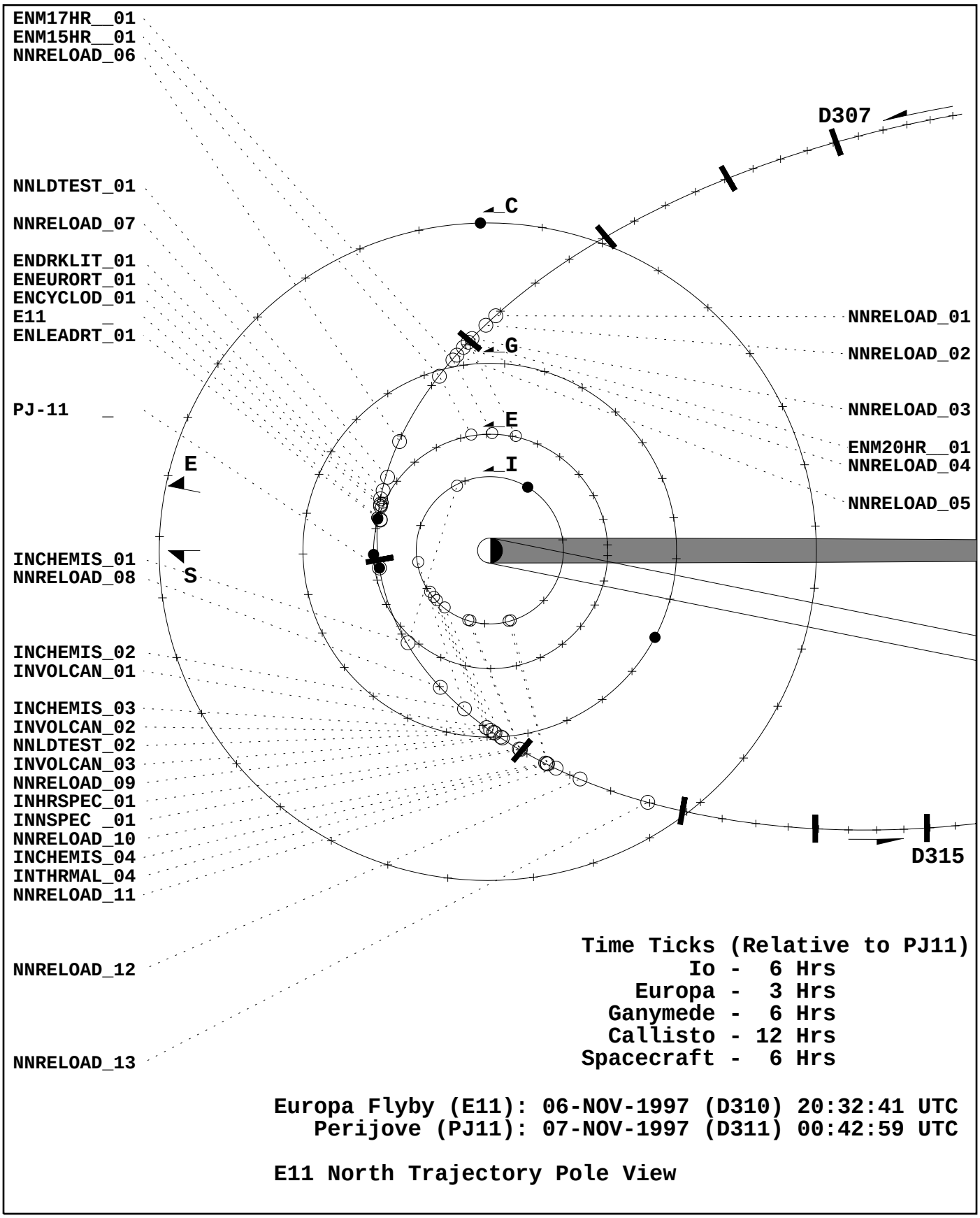

NIMS - FEL - 09/19/97

NIMS E11 CALIBRATIONS

Europa Flyby (E11): 06-NOV-1997 (D310) 20:32:41 UTC
Perijove (PJ11): 07-NOV-1997 (D311) 00:42:59 UTC

Time Ticks (Relative to E11)
Spacecraft - 2 Days

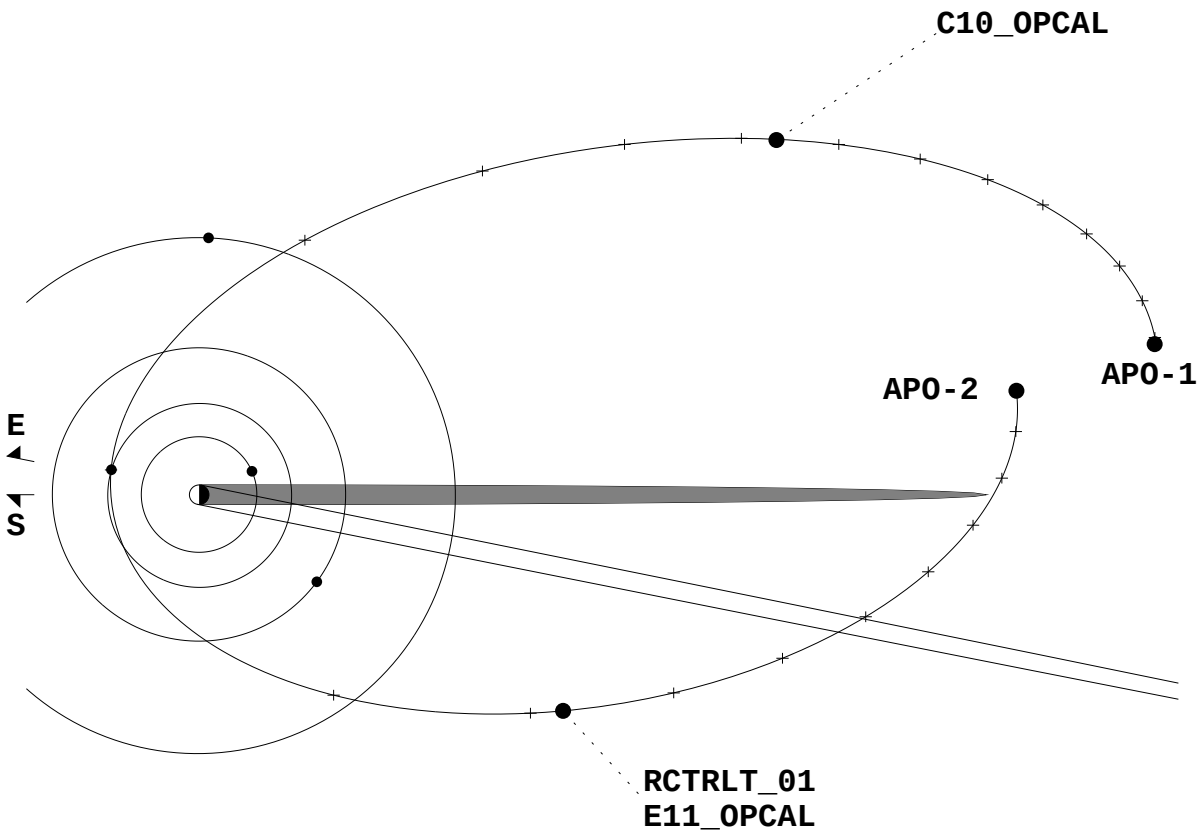

E11 North Trajectory Pole View, Apoapsis to Apoapsis

NIMS E11 RAM RELOADS

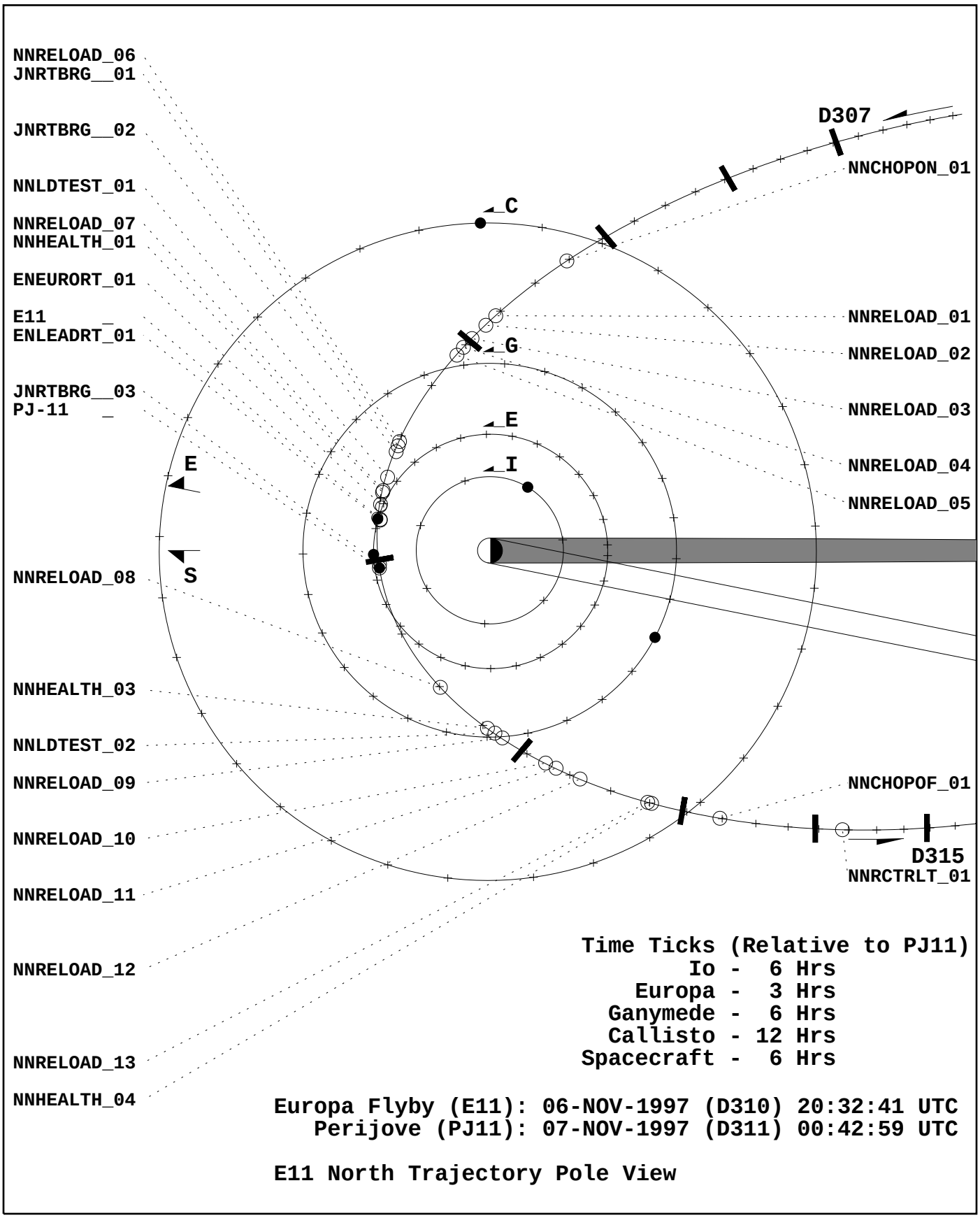

NIMS - FEL - 09/19/97

E11 NIMS INPUTS

Activity ID	Observation Title	NIMS Edit Table	NIMS PB Table	Mode	Gain	Grating start	Grating Offset	Record Format	PSID
11NNCHOPON01-	NIMS Chopper On								DA
11HNDARK__01-	NIMS Dark Observation	E11DRK252	E11DRK32	LM	3	0	4	LPU	EF
11JNBRG53M01-	Brown Barge Observation	E11J35157	E11J35157	LM	4	0	4	LPU	DC
11JNBRG53M02-	Brown Barge Observation	E11J35157	E11J35157	LM	4	0	4	LPU	DD
11JNBRG09401-	Brown Barge Observation 94 deg phase	E11JFT68C	E11JFT25A	SM	2	1	4	LPU	DE
11JNBRG09402-	Brown Barge Observation 94 deg phase	E11JFT68C	E11JFT25A	SM	2	1	4	LPU	DF
11JNBRG09403-	Brown Barge Observation 94 deg phase	E11JFT68C	E11JFT25A	SM	2	1	4	LPU	DG
11JNBRG09404-	Brown Barge Observation 94 deg phase	E11JFT68C	E11JFT25A	SM	2	1	4	LPU	DH
11NNRELOAD01-	NIMS Real-Time Software Reload							R/T	DI
11JNCYLMOS01-	Jupiter Cylindrical Mosaic Part 1	E11JGM10A	E11JGM05A	XM	2	5	4	LPU	DL
11NNRELOAD02-	NIMS Real-Time Software Reload							R/T	DM
11JNCYLMOS02-	Jupiter Cylindrical Mosaic Part 2	E11JGM10A	E11JGM05A	XM	2	5	4	LPU	DN
11JNCYLMOS03-	Jupiter Cylindrical Mosaic Part 3	E11JGM10A	E11JGM05A	XM	2	5	4	LPU	DO
11NNRELOAD03-	NIMS Real-Time Software Reload							R/T	DP
11JNCYLMOS04-	Jupiter Cylindrical Mosaic Part 4	E11JGM10A	E11JGM05A	XM	2	5	4	LPU	DQ
11ENM20HR_01-	Europa Obs Beyond 15 Rj	E11ELM442	E11ELM360	LM	4	0	4	MPW	DS
11ENM20HR_01-	Europa Obs Beyond 15 Rj	E11ELM243C	E11ELM228C	LM	3	0	4	LPU	DT
11NNRELOAD04-	NIMS Real-Time Software Reload							R/T	DR
11JNCYLMOS05-	Jupiter Cylindrical Mosaic Part 5	E11JGM10A	E11JGM05A	XM	2	5	4	LPU	DU
11NNRELOAD05-	NIMS Real-Time Software Reload							R/T	DV
11JNCYLMOS06-	Jupiter Cylindrical Mosaic Part 6	E11JGM10A	E11JGM05A	XM	2	5	4	LPU	DW
11ENM17HR_01-	Europa Obs Beyond 15 Rj	E11ELM442	E11ELM360	LM	4	0	4	MPW	DX
11ENM17HR_01-	Europa Obs Beyond 15 Rj	E11ELM243C	E11ELM228C	LM	3	0	4	LPU	DB
11ENM15HR_01-	Europa Observation at Minus 15 Hours	E11ELM442	E11ELM360	LM	4	0	4	MPW	DY
11ENM15HR_01	Europa Observation at Minus 15 Hours	E11ELM243C	E11ELM228C	LM	3	0	4	LPU	EF
11NNRELOAD06-	NIMS Real-Time Software Reload							R/T	DZ
11JNRTBRG_01-	NIMS Real-Time Brown Barge Obs	E11JLM442/MB	R/T	LM	2	0	4	R/T	KH
11JNBRG04201-	Brown Barge Observation 42 deg phase	E11JFT68C	E11JFT25A	SM	2	1	4	LPU	EA
11JNBRG04202-	Brown Barge Observation 42 deg phase	E11JFT68C	E11JFT25A	SM	2	1	4	LPU	EB
11JNRTBRG_02-	NIMS Real-Time Brown Barge Obs	E11JLM442/MB	R/T	LM	2	0	4	R/T	KI
11JNBRG04203-	Brown Barge Observation 42 deg phase	E11JFT68C	E11JFT25A	SM	2	1	4	LPU	EC
11JNBRG04204-	Brown Barge Observation 42 deg phase	E11JFT68C	E11JFT25A	SM	2	1	4	LPU	ED
11NNLDTEST01-	NIMS Test Software Reload							R/T	FH
11JNBRG04205-	Brown Barge Observation 42 deg phase	E11JFT68C	E11JFT25A	SM	2	1	4	LPU	EE
11NNRELOAD07-	NIMS Real-Time Software Reload							R/T	EH
11NNHEALTH01-	NIMS Real-Time Health Observation	E11RCVY3	R/T	LM	2	0	4	R/T	KJ
11ENDRKLIT01-	EUROPA Dark Mosaic	E11ELM243C	E11ELM228C	LM	4	0	4	LPU	EJ
11ENEURORT01-	NIMS Europa Real-Time Observation	E11ELM442/MB	R/T	LM	4	0	4	R/T	EI
11ENCYCLOD01-	EUROPA CYCLODIAL OBSERVATION	E11ELM243C	E11ELM228C	LM	4	0	4	LPU	EK
11ENLEADRT01+	Europa Leading Hemisphere Observation	E11ELM442/MB	R/T	LM	4	0	4	R/T	EM
11HNDARK__02-	NIMS Dark Observation	E11DRK252	E11DRK32	LM	2	0	4	LPU	EF
11JNBRG02001-	Brown Barge Obs 20 deg phase	E11JFT68C	E11JFT25A	SM	2	1	4	LPU	EO
11JNRTBRG_03-	NIMS Real-Time Brown Barge Obs	E11JLM442/MB	R/T	LM	2	0	4	R/T	KM
11JNBRG02002-	Brown Barge Obs 20 deg phase	E11JFT68C	E11JFT25A	SM	2	1	4	LPU	EP

E11 NIMS INPUTS

Activity ID	Observation Title	NIMS Edit Table	NIMS PB Table	Mode	Gain	Grating start	Grating Offset	Record Format	PSID
11JNTHRMNS01-	Jupiter Thermal North-South Stripe	E11J5M253A	E11J5M80A	LM	4	0	4	LPU	EQ
11JNBRGSUB01-	Brown Barge Obs	E11JSB253A	E11JSB80A	LM	4	0	4	LPU	ER
11HNDARK__03-	NIMS Dark Observation	E11DRK252	E11DRK32	LM	4	0	4	LPU	EF
11JNBRGFUL01-	Brown Barge Obs	E11JFE253A	E11JFE253A	LM	2	0	4	LPU	ES
11JNBRG02003-	Brown Barge Obs 20 deg phase	E11JFT68C	E11JFT25A	SM	2	1	4	LPU	ET
11JNBRG02004-	Brown Barge Obs 20 deg phase	E11JFT68C	E11JFT25A	SM	2	1	4	LPU	EU
11INCHEMIS01-	MONITORING OF IO'S DAYSIDE	E11ILM442	E11ILM360	LM	2	0	4	MPW	EV
11NNRELOAD08-	NIMS Real-Time Software Reload							R/T	EW
11JNBRG07203-	Brown Barge Obs 72 deg phase	E11JFT68C	E11JFT25A	SM	2	1	4	LPU	EZ
11JNBRG07204-	Brown Barge Obs 72 deg phase	E11JFT68C	E11JFT25A	SM	2	1	4	LPU	FA
11JNBRG07205-	Brown Barge Obs 72 deg phase	E11JFT68C	E11JFT25A	SM	2	1	4	LPU	FB
11INCHEMIS02-	MONITORING OF IO'S DAYSIDE	E11ILM243C	E11ILM228C	LM	2	0	4	LPU	FC
11INVOLCAN01-	MONITORING OF SELECTED VOLCANIC REGION:	E11ILMDK243D	E11ILMDK228D	LM	4	0	4	LPU	FD
11NNHEALTH03-	NIMS Real-Time Health Observation	E11RCVY3	R/T	LM	2	0	4	R/T	KJ
11INCHEMIS03-	MONITORING OF IO'S DAYSIDE	E11ILM442	E11ILM360	LM	2	0	4	MPW	FE
11INVOLCAN02-	MONITORING OF SELECTED VOLCANIC REGION:	E11ILMDK243D	E11ILMDK228D	LM	4	0	4	LPU	FF
11NNLDTEST02-	NIMS Test Software Reload							R/T	FH
11INVOLCAN03-	MONITORING OF SELECTED VOLCANIC REGION:	E11ILMDK243D	E11ILMDK228D	LM	4	0	4	LPU	FG
11NNRELOAD09-	NIMS Real-Time Software Reload							R/T	FH
11INHRSPEC01-	MONITORING OF IO'S DAYSIDE	E11ILM442	E11ILM360	LM	2	0	4	MPW	FI
11INNSPEC 01-	NIGHTSIDE SPECTRA AT HIGH RESOLUTION	E11ILM442	E11ILM360	LM	4	0	4	MPW	FJ
11NNRELOAD10-	NIMS Real-Time Software Reload							R/T	FK
11INCHEMIS04-	MONITORING OF IO'S DAYSIDE	E11ILM243C	E11ILM228C	LM	2	0	4	LPU	FL
11INTHRMAL04-	MONITORING OF IO'S NIGHTSIDE	E11ILMDK243D	E11ILMDK228D	LM	4	0	4	LPU	FM
11NNRELOAD11-	NIMS Real-Time Software Reload							R/T	FN
11JNAURVAR01+	NIMS Ride-Along Aurora Obs. with UVS	B_JAU243	B_JAU228	LM	4	0	4	LPU	
11JNAURVAR02+	NIMS Ride-Along Aurora Obs. with UVS	B_JAU243	B_JAU228	LM	4	0	4	LPU	
11HNDARK__04-	NIMS Dark Observation	E11DRK252	E11DRK32	LM	4	0	4	LPU	EF
11JNBRG11401-	Brown Barge Obs 114 deg phase	E11JFT68C	E11JFT25A	SM	2	1	4	LPU	FP
11JNBRG11402-	Brown Barge Obs 114 deg phase	E11JFT68C	E11JFT25A	SM	2	1	4	LPU	FQ
11JNBRG11403-	Brown Barge Obs 114 deg phase	E11JFT68C	E11JFT25A	SM	2	1	4	LPU	FR
11JNBRG11404-	Brown Barge Obs 114 deg phase	E11JFT68C	E11JFT25A	SM	2	1	4	LPU	FS
11NNRELOAD13-	NIMS Real-Time Software Reload							R/T	FT
11JNBRG12501-	Brown Barge Obs 125 deg phase	E11JFT68C	E11JFT25A	SM	2	1	4	LPU	FU
11JNBRG12502-	Brown Barge Obs 125 deg phase	E11JFT68C	E11JFT25A	SM	2	1	4	LPU	FV
11JNBRG12503-	Brown Barge Obs 125 deg phase	E11JFT68C	E11JFT25A	SM	2	1	4	LPU	FW
11JNBRG12504-	Brown Barge Obs 125 deg phase	E11JFT68C	E11JFT25A	SM	2	1	4	LPU	FX
11JNBRG13501-	Brown Barge Obs 135 deg phase	E11JFT68C	E11JFT25A	SM	2	1	4	LPU	FZ
11JNBRG13502-	Brown Barge Obs 135 deg phase	E11JFT68C	E11JFT25A	SM	2	1	4	LPU	KA
11JNBRG13503-	Brown Barge Obs 135 deg phase	E11JFT68C	E11JFT25A	SM	2	1	4	LPU	KB
11JNBRG13504-	Brown Barge Obs 135 deg phase	E11JFT68C	E11JFT25A	SM	2	1	4	LPU	KC
11NNCHOPOF01-	NIMS Chopper Off								KD
11NNRCTRLT01-	NIMS Real-Time RCT Calibration	E11RCT252	R/T	LM	1	0	4	R/T	KE

E11 NIMS RESOURCES

Activity ID	NIMS Mode	Record Mode	Obs. Cost (tracks)	Obs. Cost (ticks)	Number Wavelengths Returned	Observation Record Time (sec.)	Observation Playback Time (sec.)	Selected Bits of Tape sBOT (MBITS)	Bits of Tape BOT (Mbit)	Mode Cycle time (sec)
11NNCHOPON01-										
11HNDARK__01-	LM	LPU	0.0023	16	32	60.67	60.67	0.37	0.37	8.667
11JNBRG53M01-	LM	LPU	0.0064	45	80	182	182	1.12	1.12	8.667
11JNBRG53M02-	LM	LPU	0.0406	283	80	1200	1200	7.40	7.40	8.667
11JNBRG09401-	SM	LPU	0.0104	72	25	300	300	1.85	1.85	2.33
11JNBRG09402-	SM	LPU	0.0104	72	25	300	300	1.85	1.85	2.33
11JNBRG09403-	SM	LPU	0.0104	72	25	300	300	1.85	1.85	2.33
11JNBRG09404-	SM	LPU	0.0070	49	25	200	200	1.23	1.23	2.33
11JNCYLMOS01-	SM	LPU	0.0204	143	5	600	600	3.70	3.70	2.33
11JNCYLMOS02-	SM	LPU	0.0204	143	5	600	600	3.70	3.70	2.33
11JNCYLMOS03-	SM	LPU	0.0204	143	5	600	600	3.70	3.70	2.33
11JNCYLMOS04-	SM	LPU	0.0204	143	5	600	600	3.70	3.70	2.33
11ENM20HR_01-	LM	MPW	0.0522	364	360	411.34	411.34	4.74	4.74	8.667
11ENM20HR_01-	LM	LPU	0.0166	116	228	486	486	3.00	3.00	8.667
11JNCYLMOS05-	SM	LPU	0.0204	143	5	600	600	3.70	3.70	2.33
11JNCYLMOS06-	SM	LPU	0.0204	143	5	600	600	3.70	3.70	2.33
11ENM17HR_01-	LM	MPW	0.0686	479	360	542	529	6.09	6.24	8.667
11ENM17HR_01-	LM	LPU	0.0184	128	228	538	538	3.32	3.32	8.667
11ENM15HR_01-	LM	MPW	0.0764	533	360	604	591	6.81	6.96	8.667
11ENM15HR_01-	LM	LPU	0.0201	141	228	591	591	3.65	3.65	8.667
11JNRTBRG_01-	LM	R/T	0.0000	0						
11JNBRG04201-	SM	LPU	0.0137	96	25	400	200	1.23	2.47	2.33
11JNBRG04202-	SM	LPU	0.0137	96	25	400	400	2.47	2.47	2.33
11JNRTBRG_02-	LM	R/T	0.0000	0						
11JNBRG04203-	SM	LPU	0.0137	96	25	400	400	2.47	2.47	2.33
11JNBRG04204-	SM	LPU	0.0137	96	25	400	400	2.47	2.47	2.33
11JNBRG04205-	SM	LPU	0.0137	96	25	400	400	2.47	2.47	2.33
11NNHEALTH01-	LM	R/T	0.0000	0						
11ENDRKLIT01-	LM	LPU	0.0245	171	228	720	720	4.44	4.44	8.667
11ENEURORT01-	LM	R/T	0.0000	0						
11ENCYCLOD01-	LM	LPU	0.0245	171	10	720	720	4.44	4.44	8.667
11ENLEADRT01+	LM	R/T								
11HNDARK__02	LM	LPU	0.0023	16	32	60.67	60.67	0.37	0.37	8.667
11JNBRG02001-	SM	LPU	0.0104	72	25	300	300	1.85	1.85	2.33
11JNRTBRG_03-	LM	R/T	0.0000	0	R/T					
11JNBRG02002-	SM	LPU	0.0137	96	25	400	200	1.23	2.47	2.33
11JNTHRMNS01	LM	LPU	0.0935	652	80	2775	2775	17.12	17.12	8.667
11JNBRGSUB01-	LM	LPU	0.0406	283	80	1200	600	3.70	7.40	8.667
11HNDARK__03	LM	LPU	0.0023	16	32	60.67	60.67	0.37	0.37	8.667
11JNBRGFUL01-	LM	LPU	0.0406	283	253	1200	600	3.70	7.40	8.667
11JNBRG02003-	SM	LPU	0.0104	72	25	300	300	1.85	1.85	2.33

E11 NIMS RESOURCES

Activity ID	NIMS Mode	Record Mode	Obs. Cost (tracks)	Obs. Cost (ticks)	Number Wavelengths Returned	Observation Record Time (sec.)	Observation Playback Time (sec.)	Selected Bits of Tape sBOT (MBITS)	Bits of Tape BOT (Mbit)	Mode Cycle time (sec)
11JNBRG02004-	SM	LPU	0.0104	72	25	300	300	1.85	1.85	2.33
11INCHEMIS01-	LM	MPW	0.0197	137	360	153.33	153.33	1.77	1.77	8.667
11JNBRG07203-	SM	LPU	0.0122	85	25	356	356	2.20	2.20	2.33
11JNBRG07204-	SM	LPU	0.0137	96	25	400	400	2.47	2.47	2.33
11JNBRG07205-	SM	LPU	0.0137	96	25	400	400	2.47	2.47	2.33
11INCHEMIS02-	LM	LPU	0.0060	42	228	170.67	170.67	1.05	1.05	8.667
11INVOLCAN01-	LM	LPU	0.0060	42	228	170.67	170.67	1.05	1.05	8.667
11NNHEALTH03-	LM	R/T	0.0000	0						
11INCHEMIS03-	LM	MPW	0.0156	109	360	121	121	1.39	1.39	8.667
11INVOLCAN02-	LM	LPU	0.0060	42	228	170.67	170.67	1.05	1.05	8.667
11INVOLCAN03-	LM	LPU	0.0060	42	228	170.67	170.67	1.05	1.05	8.667
11INHRSPEC01-	LM	MPW	0.0219	153	360	170.67	170.67	1.97	1.97	8.667
11INNSPEC 01-	LM	MPW	0.0219	153	360	170.67	170.67	1.97	1.97	8.667
11INCHEMIS04-	LM	LPU	0.0060	42	228	169.33	169.33	1.04	1.04	8.667
11INTHRMAL04-	LM	LPU	0.0060	42	228	170.67	170.67	1.05	1.05	8.667
11JNAURVAR01+	LM	LPU	0.0210	147	40	616.68	616.68	3.80	3.80	8.667
11JNAURVAR02+	LM	LPU	0.0821	573	40	2436.68	60.667	0.37	15.03	8.667
11HNDARK__04-	LM	LPU	0.0023	16	32	60.67	60.67	0.37	0.37	8.667
11JNBRG11401-	SM	LPU	0.0083	58	25	240	240	1.48	1.48	2.33
11JNBRG11402-	SM	LPU	0.0104	72	25	300	300	1.85	1.85	2.33
11JNBRG11403-	SM	LPU	0.0098	69	25	284	284	1.75	1.75	2.33
11JNBRG11404-	SM	LPU	0.0097	68	25	280	280	1.73	1.73	2.33
11JNBRG12501-	SM	LPU	0.0083	58	25	240	240	1.48	1.48	2.33
11JNBRG12502-	SM	LPU	0.0070	49	25	200	200	1.23	1.23	2.33
11JNBRG12503-	SM	LPU	0.0070	49	25	200	200	1.23	1.23	2.33
11JNBRG12504-	SM	LPU	0.0070	49	25	200	200	1.23	1.23	2.33
11JNBRG13501-	SM	LPU	0.0054	38	25	152	152	0.94	0.94	2.33
11JNBRG13502-	SM	LPU	0.0054	38	25	152	152	0.94	0.94	2.33
11JNBRG13503-	SM	LPU	0.0054	38	25	152	152	0.94	0.94	2.33
11JNBRG13504-	SM	LPU	0.0054	38	25	152	152	0.94	0.94	2.33
11NNRCTRLT01-	LM	R/T	0.0000	0						
			0.0000	0						
Total			**1.1513**	**8033**				157.97	182.80	
Allocation			**1.0496**	**7468**						
Overage			**0.1017**	**565**						

E11 NIMS RESOURCES

Activity ID	AACS Mbits Comp 2.5	RT BTG Mbits	Thold	Comp	Total BTG Mbits (4% Ohead)	Total BTG Mbits AWG	Total BTG Mbits SWG	Data Reduct. Factor (sBOT/BTG)	Pass
11NNCHOPON01-									
11HNDARK__01-	0.00		0	1.9	0.0245	0.0245		15.3	1
11JNBRG53M01-	0.01		0	1.3	0.2688	0.2688		4.2	1
11JNBRG53M02-	0.07		0	1.3	1.7722	1.7722		4.2	1
11JNBRG09401-	0.02		0	1.9	0.3524	0.3524		5.3	2
11JNBRG09402-	0.02		0	1.9	0.3524	0.3524		5.3	1
11JNBRG09403-	0.02		0	1.9	0.3524	0.3524		5.3	1
11JNBRG09404-	0.01		0	1.9	0.2349	0.2349		5.3	1
11JNCYLMOS01-	0.03		0	1.9	0.1410	0.1410		26.3	2
11JNCYLMOS02-	0.03		0	1.9	0.1410	0.1410		26.3	2
11JNCYLMOS03-	0.03		0	1.9	0.1410	0.1410		26.3	1
11JNCYLMOS04-	0.03		0	1.9	0.1410	0.1410		26.3	1
11ENM20HR_01-	0.02		0	1.8	1.9744		1.9744	2.4	1
11ENM20HR_01-	0.03		0	1.8	1.4774		1.4774	2.0	2
11JNCYLMOS05-	0.03		0	1.9	0.1410	0.1410		26.3	1
11JNCYLMOS06-	0.03		0	1.9	0.1410	0.1410		26.3	1
11ENM17HR_01-	0.03		0	1.9	2.4055		2.4055	2.5	1
11ENM17HR_01-	0.03		0	1.9	1.5494		1.5494	2.1	1
11ENM15HR_01-	0.03		0	1.9	2.6874		2.6874	2.5	2
11ENM15HR_01-	0.03		0	1.9	1.7020		1.7020	2.1	1
11JNRTBRG_01-		0.080	0						
11JNBRG04201-	0.01		0	1.9	0.2349	0.2349		5.3	2
11JNBRG04202-	0.02		0	1.9	0.4698	0.4698		5.3	1
11JNRTBRG_02-		0.080	0						
11JNBRG04203-	0.02		0	1.9	0.4698	0.4698		5.3	1
11JNBRG04204-	0.02		0	1.9	0.4698	0.4698		5.3	1
11JNBRG04205-	0.02		0	1.9	0.4698	0.4698		5.3	1
11NNHEALTH01-		0.001	0						
11ENDRKLIT01-	0.04		0	1.3	3.0305		3.0305	1.5	2
11ENEURORT01-		0.016	0						
11ENCYCLOD01-	0.04		0	1.3	0.1329		0.1329	33.4	1
11ENLEADRT01+		0.128	0						
11HNDARK__02	0.00		0	1.9	0.0245	0.0245		15.3	1
11JNBRG02001-	0.02		0	1.9	0.3524	0.3524		5.3	2
11JNRTBRG_03-		0.080	0						
11JNBRG02002-	0.01		0	1.9	0.2349	0.2349		5.3	2
11JNTHRMNS01	0.16		0	1.9	2.8041	2.8041		6.1	1
11JNBRGSUB01-	0.03		0	1.9	0.6063	0.6063		6.1	1
11HNDARK__03	0.00		0	1.9	0.0245	0.0245		15.3	1
11JNBRGFUL01-	0.03		0	1.9	1.9174	1.9174		1.9	1
11JNBRG02003-	0.02		0	1.9	0.3524	0.3524		5.3	1

E11 NIMS RESOURCES

Activity ID	AACS Mbits Comp 2.5	RT BTG Mbits	Thold	Comp	Total BTG Mbits (4% Ohead)	Total BTG Mbits AWG	Total BTG Mbits SWG	Data Reduct. Factor (sBOT/BTG)	Pass
11JNBRG02004-	0.02		0	1.9	0.3524	0.3524		5.3	2
11INCHEMIS01-	0.01		0	2.2	0.6021		0.6021	2.9	1
11JNBRG07203-	0.02		0	1.9	0.4182	0.4182		5.3	1
11JNBRG07204-	0.02		0	1.9	0.4698	0.4698		5.3	2
11JNBRG07205-	0.02		0	1.9	0.4698	0.4698		5.3	1
11INCHEMIS02-	0.01		0	1.4	0.6671		0.6671	1.6	1
11INVOLCAN01-	0.01		0	1.4	0.6671		0.6671	1.6	1
11NNHEALTH03-		0.001	0						
11INCHEMIS03-	0.01		0	2.2	0.4752		0.4752	2.9	1
11INVOLCAN02-	0.01		0	1.4	0.6671		0.6671	1.6	1
11INVOLCAN03-	0.01		0	1.4	0.6671		0.6671	1.6	1
11INHRSPEC01-	0.01		0	1.2	1.2288		1.2288	1.6	2
11INNSPEC 01-	0.01		0	1.2	1.2288		1.2288	1.6	1
11INCHEMIS04-	0.01		0	2.2	0.4212		0.4212	2.5	2
11INTHRMAL04-	0.01		0	1.4	0.6671		0.6671	1.6	1
11JNAURVAR01+	0.04		0	2.0	0.2960	0.2960		12.9	1
11JNAURVAR02+	0.00		0	2.0	0.0291	0.0291		12.9	1
11HNDARK__04-	0.00		0	1.9	0.0245	0.0245		15.3	1
11JNBRG11401-	0.01		0	1.9	0.2819	0.2819		5.3	1
11JNBRG11402-	0.02		0	1.9	0.3524	0.3524		5.3	1
11JNBRG11403-	0.02		0	1.4	0.4527	0.4527		3.9	1
11JNBRG11404-	0.02		0	1.4	0.4464	0.4464		3.9	1
11JNBRG12501-	0.01		0	1.9	0.2819	0.2819		5.3	1
11JNBRG12502-	0.01		0	1.9	0.2349	0.2349		5.3	1
11JNBRG12503-	0.01		0	1.9	0.2349	0.2349		5.3	1
11JNBRG12504-	0.01		0	1.9	0.2349	0.2349		5.3	1
11JNBRG13501-	0.01		0	1.9	0.1785	0.1785		5.3	1
11JNBRG13502-	0.01		0	1.9	0.1785	0.1785		5.3	1
11JNBRG13503-	0.01		0	1.9	0.1785	0.1785		5.3	1
11JNBRG13504-	0.01		0	1.9	0.1785	0.1785		5.3	1
11NNRCTRLT01-		0.080			0.0800		0.0800		
Total					40.259	17.928	22.331		
Allocation					40.129	17.830	22.299		
Overage					0.1300	0.098	0.032		

NIMS E11 OBSERVING GEOMETRY

OAPEL	Latitude (deg)	Longitude (deg)	Range (km)	Cone (deg)	Light (deg)	View (deg)	Phase (deg)
11HNDARK__01	----------	----------	-------	90	----------	----------	----------
11JNBRG53M01	+5 to +20	46 to 59	1408K	97	141 to 153	52 to 65	93
11JNBRG53M02	+5 to +20	46 to 97	1358K	97	92 to 153	14 to 65	93
11JNBRG09401	+5 to +20	14 to 54	1235K	96	50 to 91	13 to 47	95
11JNBRG09402	+5 to +20	33 to 73	1318K	96	50 to 91	13 to 47	94
11JNBRG09403	+5 to +20	30 to 77	1318K	96	34 to 81	18 to 64	94
11JNBRG09404	+5 to +20	23 to 81	1314K	96	14 to 65	31 to 90	93
11JNCYLMOS01	-37 to +35	80 to 151	1270K	99	42 to 97	3 to 66	91
11JNCYLMOS02	-37 to +35	120 to 198	1230K	101	31 to 89	3 to 78	89
11JNCYLMOS03	-20 to +55	151 to 240	1200K	103	29 to 88	3 to 91	86
11JNCYLMOS04	-20 to +55	191 to 283	1160K	105	42 to 94	2 to 84	85
11ENM20HR_01	-90 to +90	53 to 175	600K	127	1 to 95	0 to 90	63
11JNCYLMOS05	-20 to +55	238 to 329	1120K	107	34 to 88	0 to 90	82
11JNCYLMOS06	-20 to +55	320 to 15	1072K	110	39 to 91	1 to 76	80
11ENM17HR_01	-90 to +90	62 to 188	480K	128	2 to 96	0 to 90	62
11ENM15HR_01	-90 to +90	80 to 191	385K	128	1 to 89	0 to 81	61
11JNRTBRG_01	+10 to +20	36 to 44	740K	144	72 to 83	30 to 40	45
11JNBRG04201	+10 to +20	25 to 60	738K	145	55 to 91	18 to 50	45

NIMS E11 OBSERVING GEOMETRY

OAPEL	Latitude (deg)	Longitude (deg)	Range (km)	Cone (deg)	Light (deg)	View (deg)	Phase (deg)
11JNBRG04202	+10 to +20	31 to 65	732K	145	54 to 91	18 to 50	44
11JNRTBRG_02	+10 to +20	35 to 45	720K	145	52 to 66	16 to 25	45
11JNBRG04203	+10 to +20	39 to 69	718K	147	47 to 80	16 to 40	43
11JNBRG04204	+10 to +20	38 to 67	695K	148	18 to 46	13 to 36	42
11JNBRG04205	+10 to +20	25 to 83	700K	151	10 to 51	28 to 90	38
11ENDRKLIT01	-5 to +10	201 to 224	31.4K	128	43 to 67	4 to 19	62
11ENEURORT01	-1 to +10	218 to 220	23.0K	130	59	1	60
11ENCYCLOD01	+10 to +20	211 to 224	18.8K	144	72 to 83	30 to 40	45
11ENLEADRT01	+30 to +40	86 to 88	3.2K	108	78 to 80	25 to 30	63
11HNDARK__02	----------	----------	-------	90	----------	----------	----------
11JNBRG02001	+10 to +20	13 to 63	610K	158	29 to 80	39 to 93	11
11JNRTBRG_03	+10 to +20	28 to 57	610K	156	35 to 68	48 to 83	13
11JNBRG02002	+10 to +20	19 to 78	610K	155	17 to 77	29 to 93	13
11JNTHRMNS01	-90 to +90	330 to 10	610K	156	18 to 88	5 to 91	13
11JNBRGSUB01	+10 to +20	37 to 70	584K	149	13 to 27	14 to 47	20
11HNDARK__03	----------	----------	-------	90	----------	----------	----------
11JNBRGFUL01	+10 to +20	37 to 66	585K	147	16 to 53	16 to 34	22
11JNBRG02003	+10 to +20	34 to 65	598K	146	40 to 73	21 to 52	24

NIMS E11 OBSERVING GEOMETRY

OAPEL	Latitude (deg)	Longitude (deg)	Range (km)	Cone (deg)	Light (deg)	View (deg)	Phase (deg)
11JNBRG02004	+10 to +20	41 to 73	620K	143	62 to 95	36 to 70	27
11INCHEMIS01	-90 to +90	315 to 135	947K	95	7 to 163	2 to 90	74
11JNBRG07203	+5 to +20	37 to 70	781K	129	28 to 58	18 to 55	74
11JNBRG07204	+5 to +20	37 to 69	798K	128	49 to 82	11 to 35	75
11JNBRG07205	+5 to +20	45 to 76	814K	128	62 to 95	17 to 27	75
11INCHEMIS02	-90 to +90	19 to 172	886K	96	20 to 167	0 to 90	108
11INVOLCAN01	-90 to +90	14 to 194	838K	91	25 to 169	0 to 90	112
11INCHEMIS03	-90 to +90	76 to 196	829K	92	25 to 144	0 to 90	113
11INVOLCAN02	-90 to +90	22 to 201	822K	91	25 to 170	0 to 90	113
11INVOLCAN03	-90 to +90	29 to 209	809K	96	25 to 168	1 to 90	113
11INHRSPEC01	-90 to +90	53 to 233	791K	93	23 to 168	0 to 90	111
11INNSPEC_01	-90 to +90	55 to 235	791K	93	23 to 168	0 to 90	111
11INCHEMIS04	-90 to +90	92 to 272	850K	100	18 to 169	0 to 90	104
11INTHRMAL04	-90 to +90	93 to 273	853K	100	17 to 169	0 to 90	104
11JNAURVAR01	+45 to +70	170 to 190	1276K	97	108 to 112	57 to 60	106
11JNAURVAR02	+32 to +74	121 to 302	1313K	97	75 to 144	60 to 91	106
11HNDARK__04	----------	----------	-------	90	----------	----------	----------
11JNBRG11401	+5 to +20	0 to 60	1395K	90	28 to 85	29 to 90	114

NIMS E11 OBSERVING GEOMETRY

OAPEL	Latitude (deg)	Longitude (deg)	Range (km)	Cone (deg)	Light (deg)	View (deg)	Phase (deg)
11JNBRG11402	+5 to +20	7 to 74	1410K	89	29 to 95	18 to 90	114
11JNBRG11403	+5 to +20	25 to 91	1430K	89	30 to 95	21 to 90	114
11JNBRG11404	+5 to +20	37 to 103	1430K	89	31 to 95	22 to 90	114
11JNBRG12501	+5 to +20	350 to 55	1695K	80	36 to 101	23 to 90	123
11JNBRG12502	+5 to +20	12 to 70	1698K	80	37 to 95	29 to 90	124
11JNBRG12503	+5 to +20	26 to 85	1710K	80	38 to 95	29 to 90	124
11JNBRG12504	+5 to +20	38 to 97	1719K	80	39 to 96	30 to 90	124
11JNBRG13501	+5 to +20	1 to 55	1935K	38	43 to 96	36 to 90	131
11JNBRG13502	+5 to +20	15 to 69	1970K	38	43 to 96	36 to 90	131
11JNBRG13503	+5 to +20	30 to 84	1980K	38	43 to 96	36 to 90	131
11JNBRG13504	+5 to +20	42 to 96	1990K	38	44 to 97	36 to 90	131

Track 1

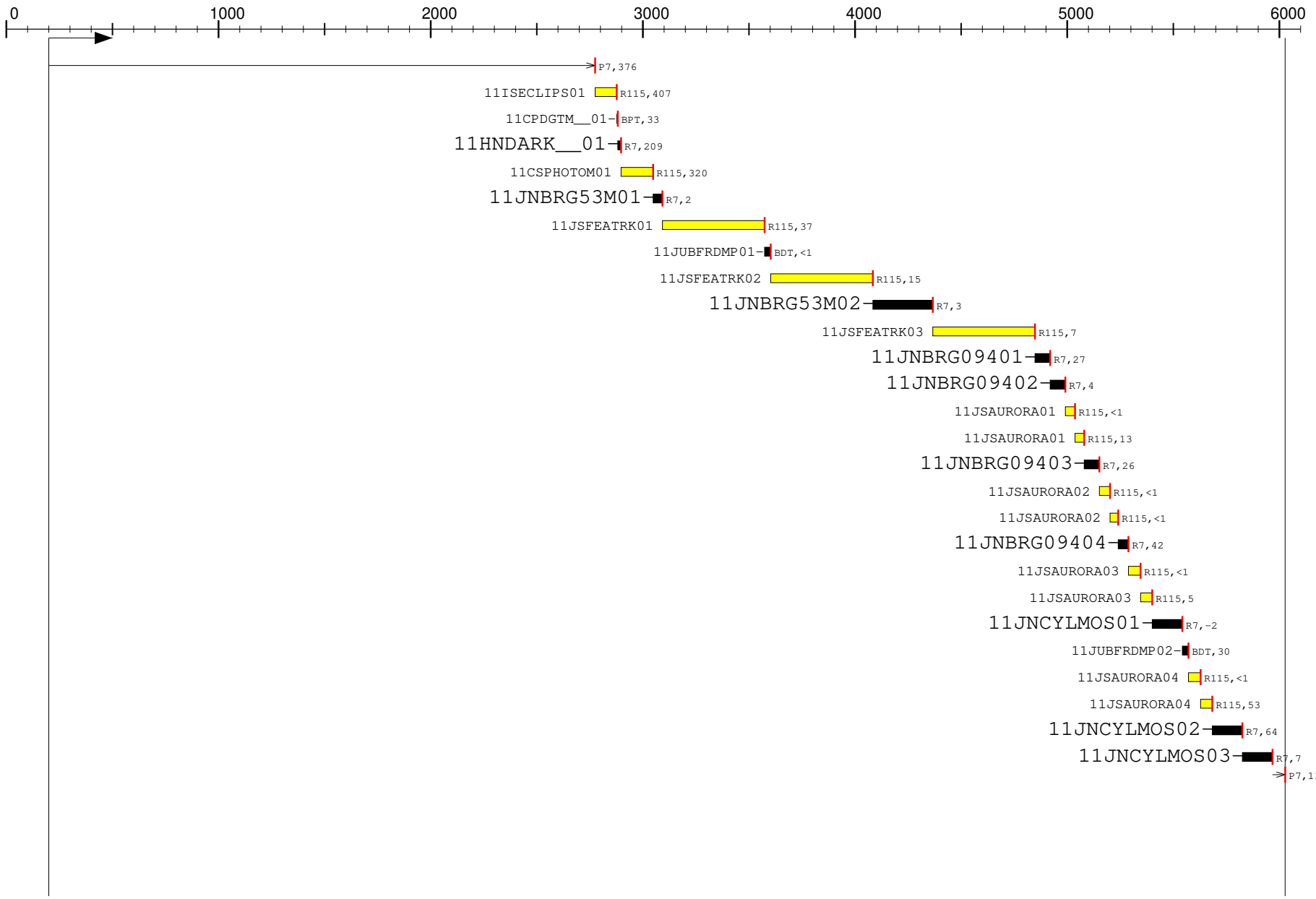

J.Culwell, 31-Dec-96, v0.02

Track 2

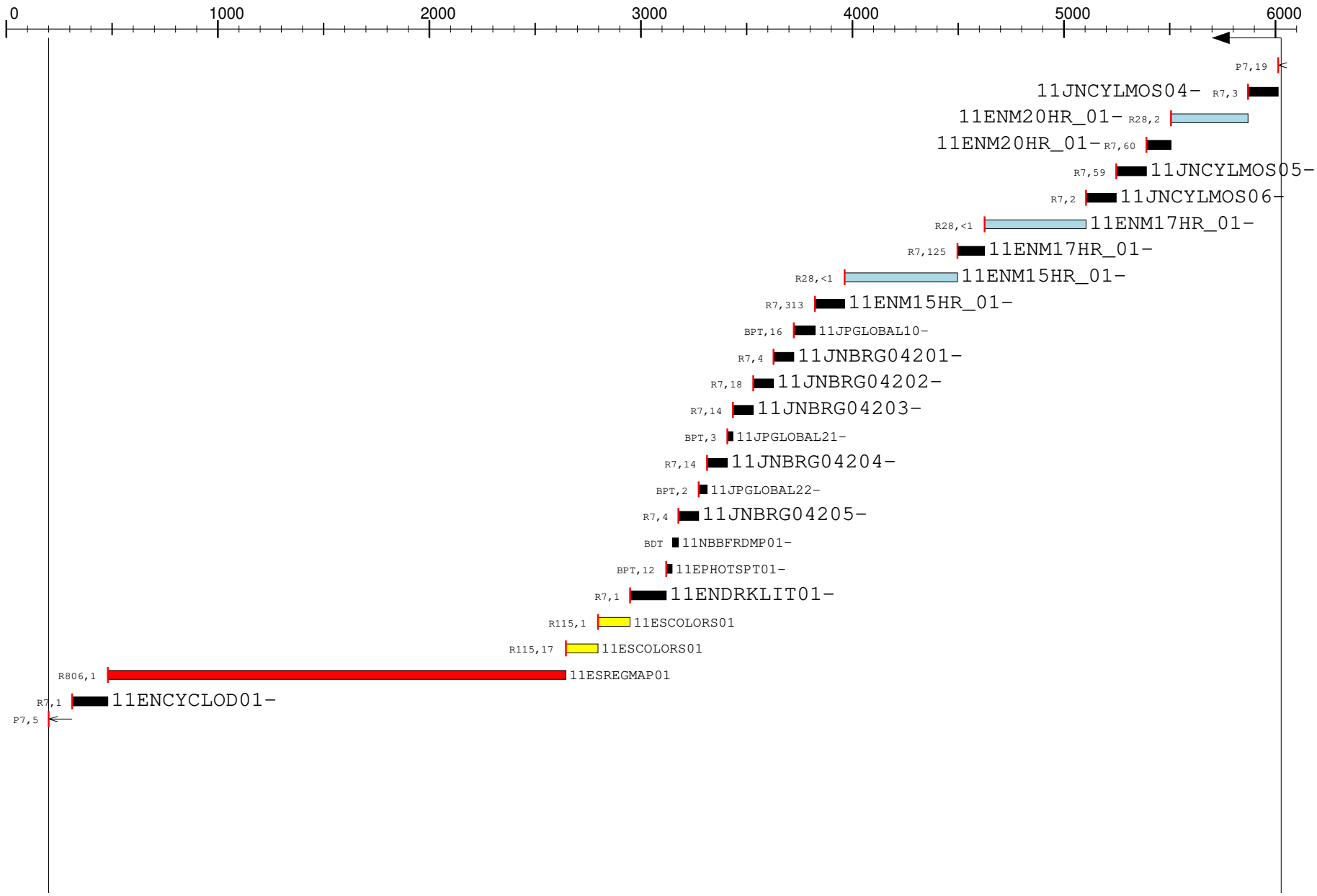

J.Culwell, 31-Dec-96, v0.02

Track 3

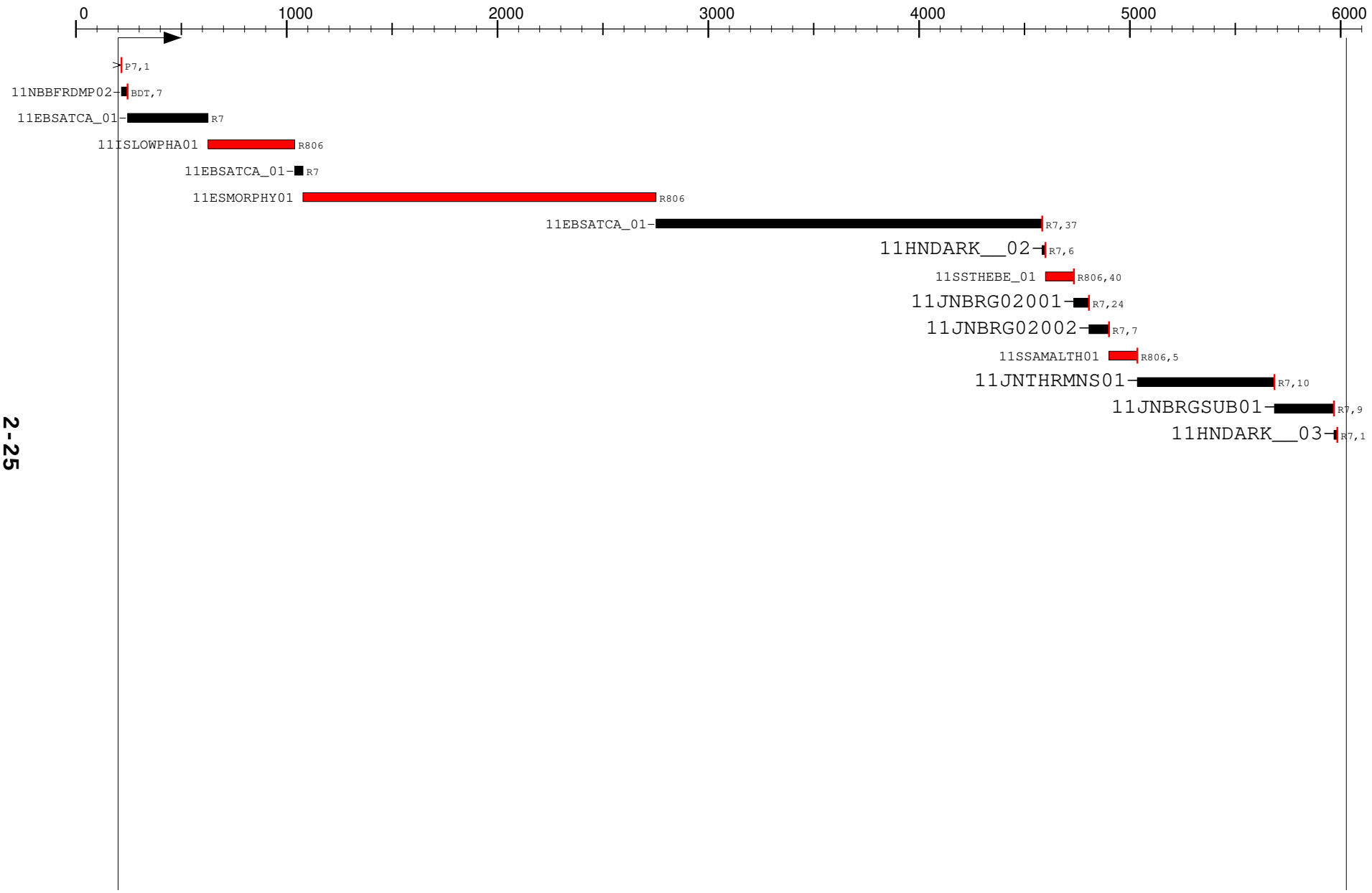

J.Culwell, 31-Dec-96, v0.02

Track 4

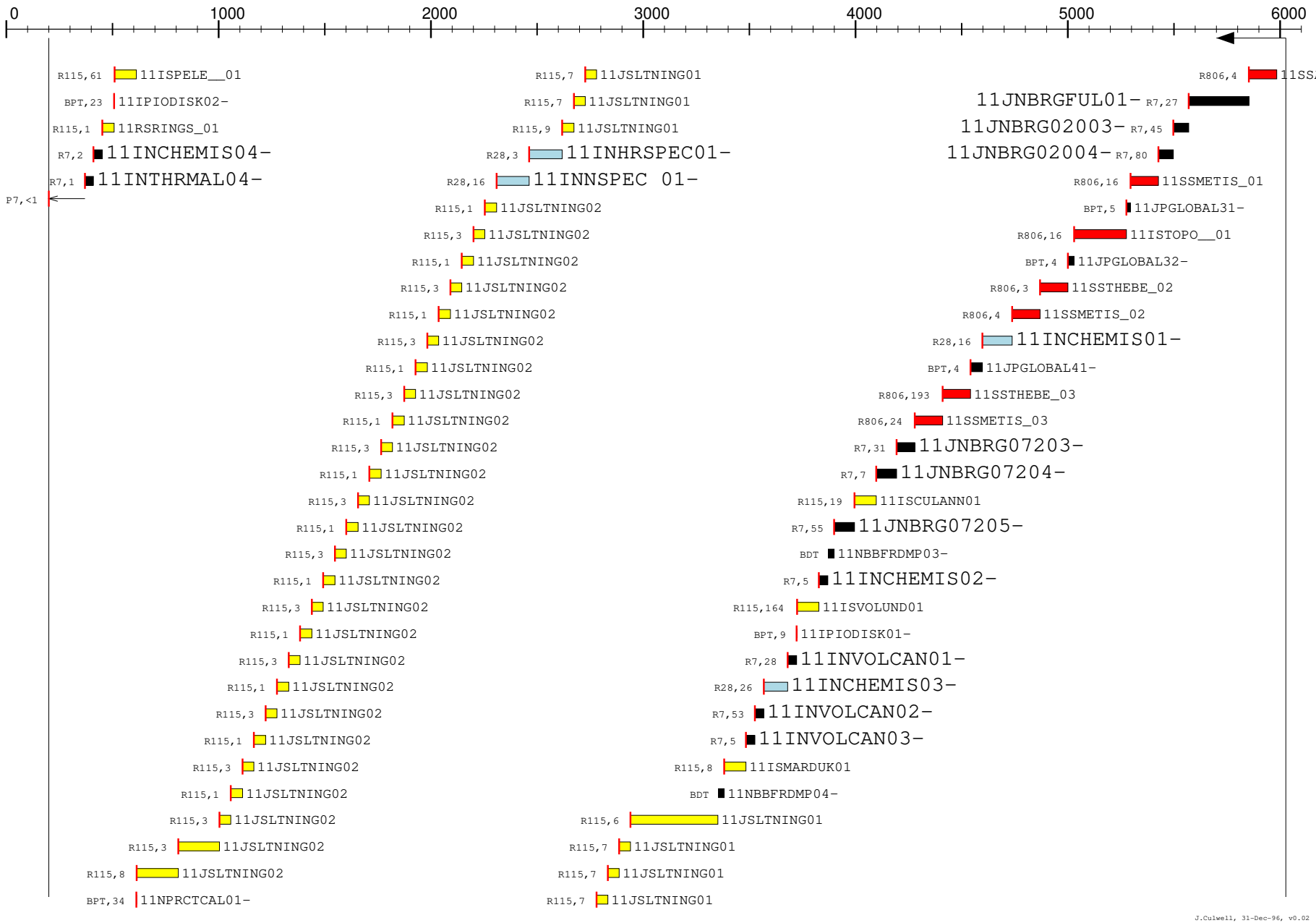
0
1000
2000
3000
4000
5000
6000
R115,61 11ISPELE__01
BPT,23 11IPIODISK02-
R115,1 11RSRINGS_01
R7,2 11INCHEMIS04-
R7,1 11INTHRMAL04-
P7,<1
R115,7 11JSLTNING01
R115,7 11JSLTNING01
R115,9 11JSLTNING01
R28,3 11INHRSPEC01-
R28,16 11INNSPEC 01-
R115,1 11JSLTNING02
R115,3 11JSLTNING02
R115,1 11JSLTNING02
R115,3 11JSLTNING02
R115,1 11JSLTNING02
R115,3 11JSLTNING02
R115,1 11JSLTNING02
R115,3 11JSLTNING02
R115,1 11JSLTNING02
R115,3 11JSLTNING02
R115,1 11JSLTNING02
R115,3 11JSLTNING02
R115,1 11JSLTNING02
R115,3 11JSLTNING02
R115,1 11JSLTNING02
R115,3 11JSLTNING02
R115,1 11JSLTNING02
R115,3 11JSLTNING02
R115,1 11JSLTNING02
R115,3 11JSLTNING02
R115,3 11JSLTNING02
R115,8 11JSLTNING02
BPT,34 11NPRCTCAL01-
R806,4 11SSADRAST01
11JNBRGFUL01- R7,27
11JNBRG02003- R7,45
11JNBRG02004- R7,80
R806,16 11SSMETIS_01
BPT,5 11JPGLOBAL31-
R806,16 11ISTOPO__01
BPT,4 11JPGLOBAL32-
R806,3 11SSTHEBE_02
R806,4 11SSMETIS_02
R28,16 11INCHEMIS01-
BPT,4 11JPGLOBAL41-
R806,193 11SSTHEBE_03
R806,24 11SSMETIS_03
R7,31 11JNBRG07203-
R7,7 11JNBRG07204-
R115,19 11ISCULANN01
R7,55 11JNBRG07205-
BDT 11NBBFRDMP03-
R7,5 11INCHEMIS02-
R115,164 11ISVOLUND01
BPT,9 11IPIODISK01-
R7,28 11INVOLCAN01-
R28,26 11INCHEMIS03-
R7,53 11INVOLCAN02-
R7,5 11INVOLCAN03-
R115,8 11ISMARDUK01
BDT 11NBBFRDMP04-
R115,6 11JSLTNING01
R115,7 11JSLTNING01
R115,7 11JSLTNING01
R115,7 11JSLTNING01
J.Culwell, 31-Dec-96, v0.02

Track 1

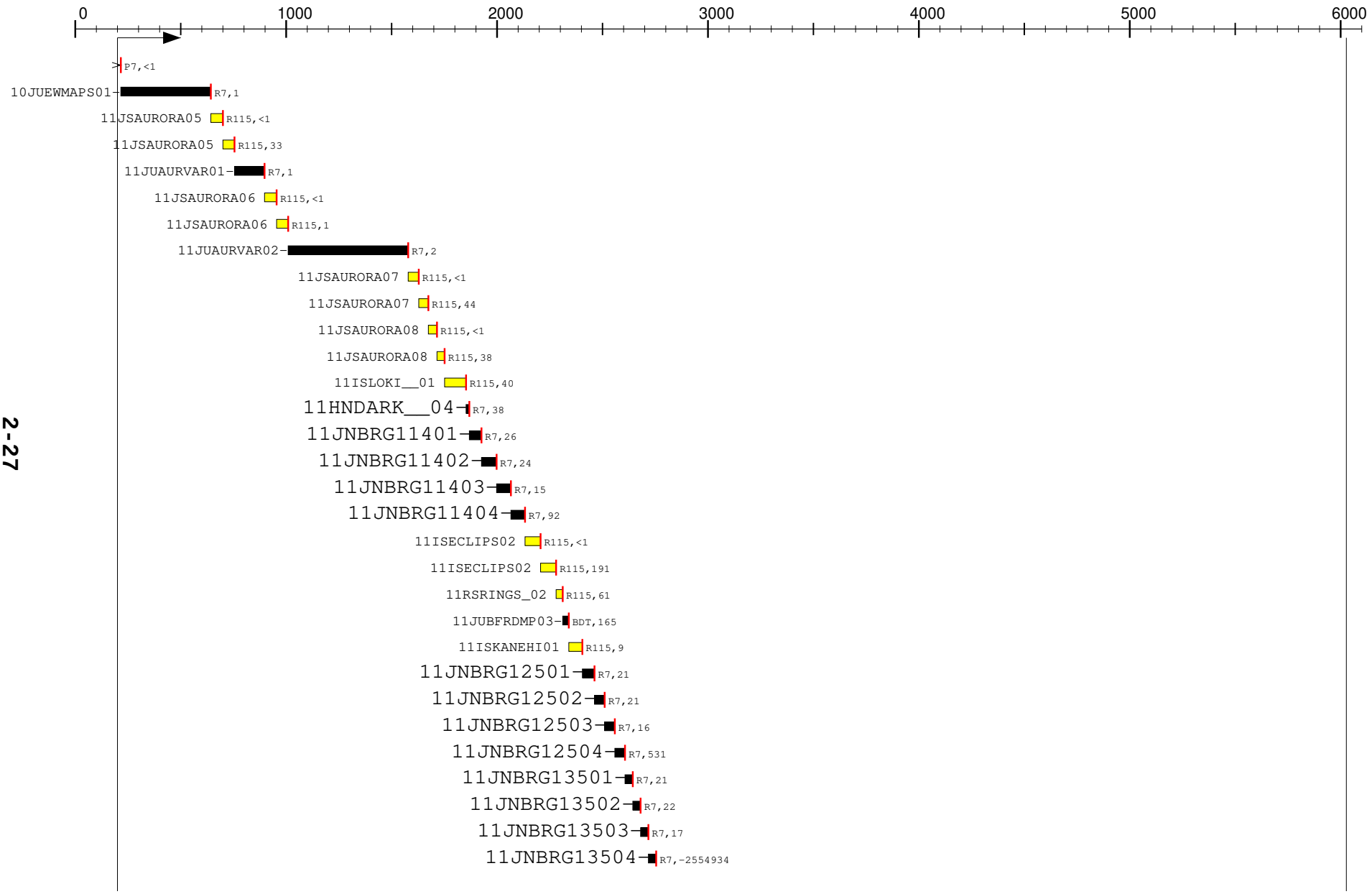

J.Culwell, 31-Dec-96, v0.02

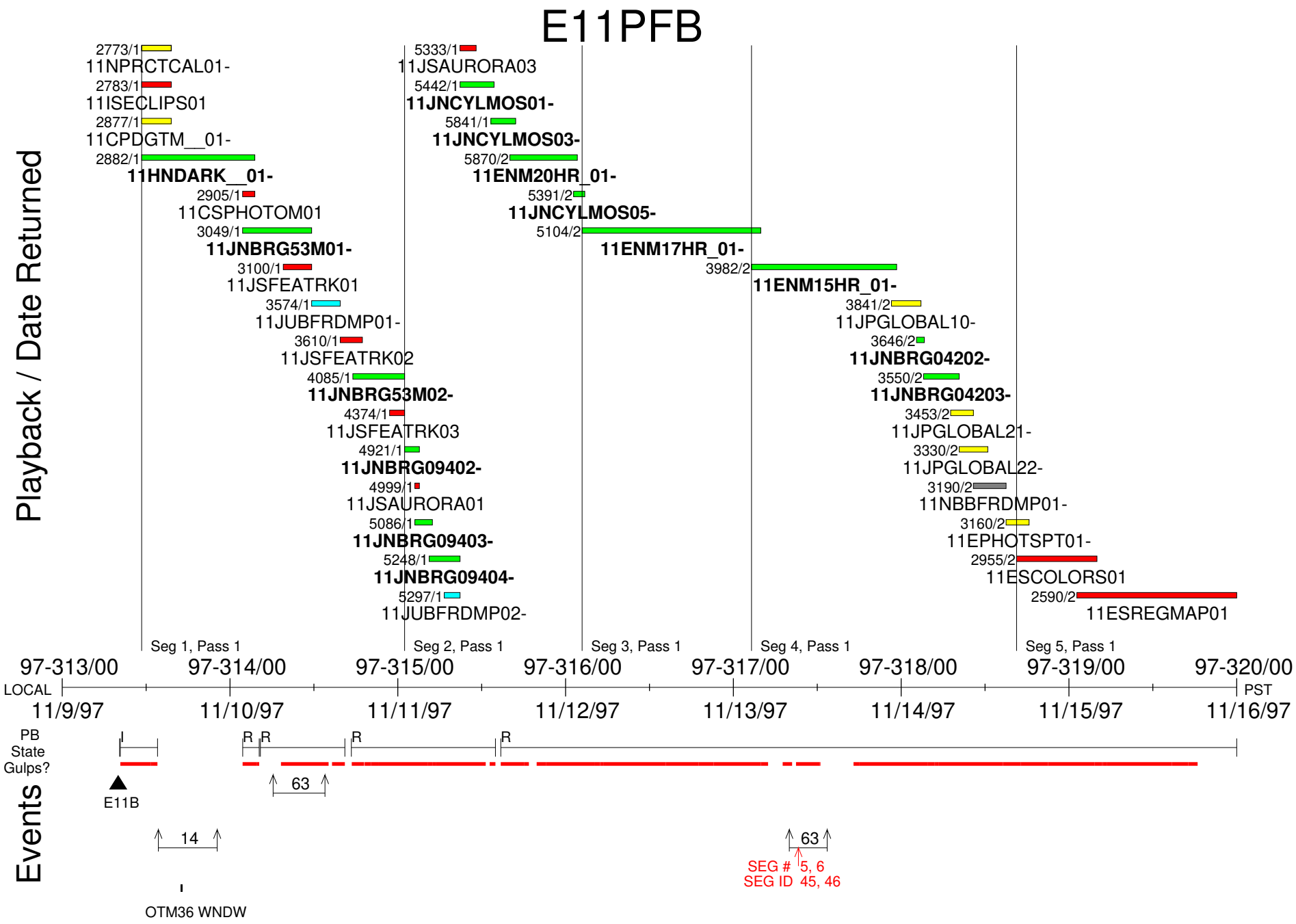
E11PFB
Playback / Date Returned
2773/1
11NPRCTCAL01-
2783/1
11ISECLIPS01
2877/1
11CPDGTM__01-
2882/1
11HNDARK__01-
2905/1
11CSPHOTOM01
3049/1
11JNBRG53M01-
3100/1
11JSFEATRK01
3574/1
11JUBFRDMP01-
3610/1
11JSFEATRK02
4085/1
11JNBRG53M02-
4374/1
11JSFEATRK03
4921/1
11JNBRG09402-
4999/1
11JSAURORA01
5086/1
11JNBRG09403-
5248/1
11JNBRG09404-
5297/1
11JUBFRDMP02-
5333/1
11JSAURORA03
5442/1
11JNCYLMOS01-
5841/1
11JNCYLMOS03-
5870/2
11ENM20HR_01-
5391/2
11JNCYLMOS05-
5104/2
11ENM17HR_01-
3982/2
11ENM15HR_01-
3841/2
11JPGLOBAL10-
3646/2
11JNBRG04202-
3550/2
11JNBRG04203-
3453/2
11JPGLOBAL21-
3330/2
11JPGLOBAL22-
3190/2
11NBBFRDMP01-
3160/2
11EPHOTSPT01-
2955/2
11ESCOLORS01
2590/2
11ESREGMAP01
Seg 1, Pass 1
Seg 2, Pass 1
Seg 3, Pass 1
Seg 4, Pass 1
Seg 5, Pass 1
97-313/00
97-314/00
97-315/00
97-316/00
97-317/00
97-318/00
97-319/00
97-320/00
LOCAL
PST
11/9/97
11/10/97
11/11/97
11/12/97
11/13/97
11/14/97
11/15/97
11/16/97
PB State Gulps?
I
R R
R
R
Events
E11B
63
14
63
SEG # 5, 6
SEG ID 45, 46
OTM36 WNDW

E11PFB

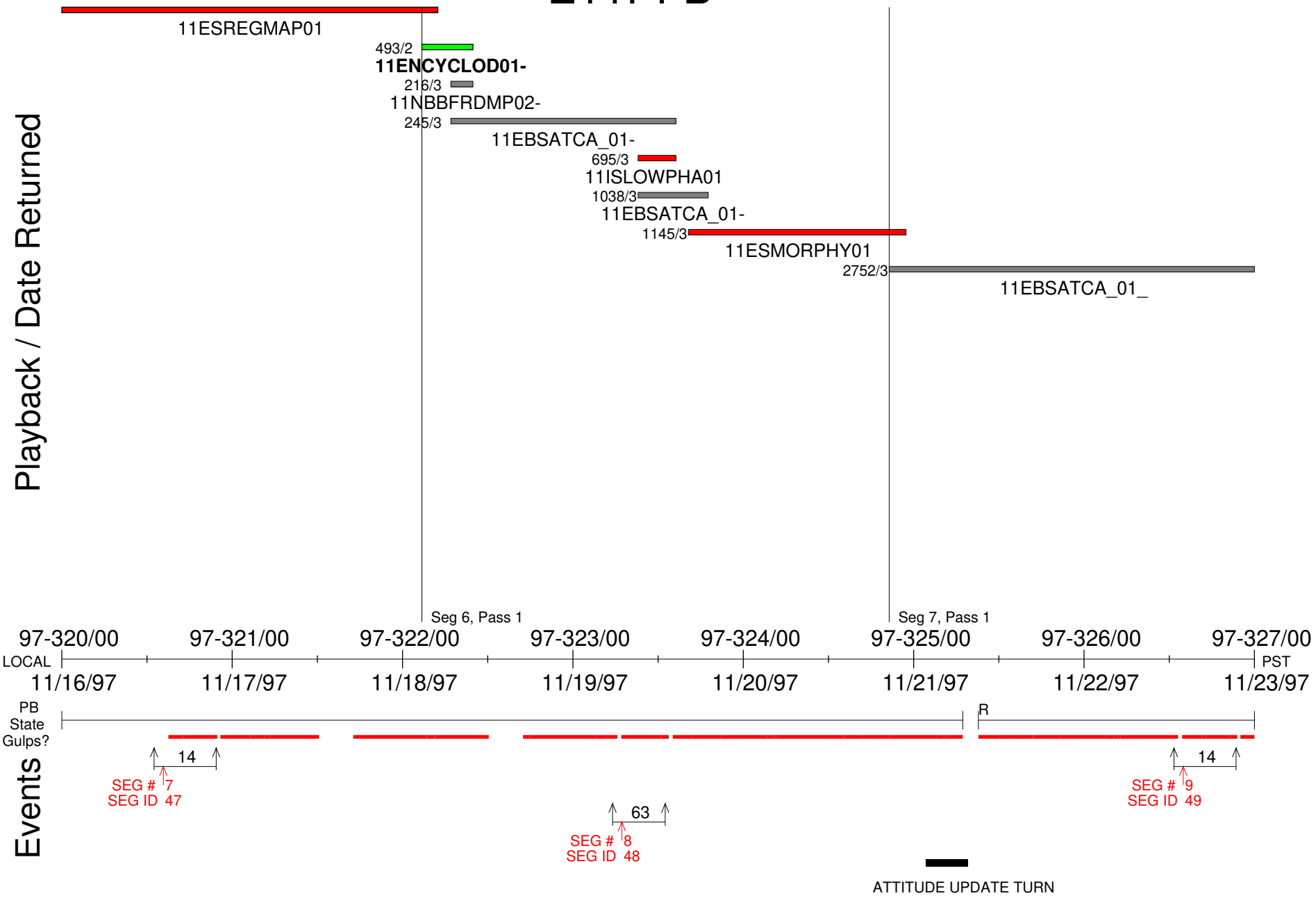
Playback / Date Returned
11ESREGMAP01
493/2
11ENCYCLOD01-
216/3
11NBBFRDMP02-
245/3
11EBSATCA_01-
695/3
11ISLOWPHA01
1038/3
11EBSATCA_01-
1145/3
11ESMORPHY01
2752/3
11EBSATCA_01_
Seg 6, Pass 1
Seg 7, Pass 1
97-320/00
97-321/00
97-322/00
97-323/00
97-324/00
97-325/00
97-326/00
97-327/00
LOCAL
PST
11/16/97
11/17/97
11/18/97
11/19/97
11/20/97
11/21/97
11/22/97
11/23/97
PB State Gulps?
R
Events
14
SEG # 7
SEG ID 47
63
SEG # 8
SEG ID 48
14
SEG # 9
SEG ID 49
ATTITUDE UPDATE TURN

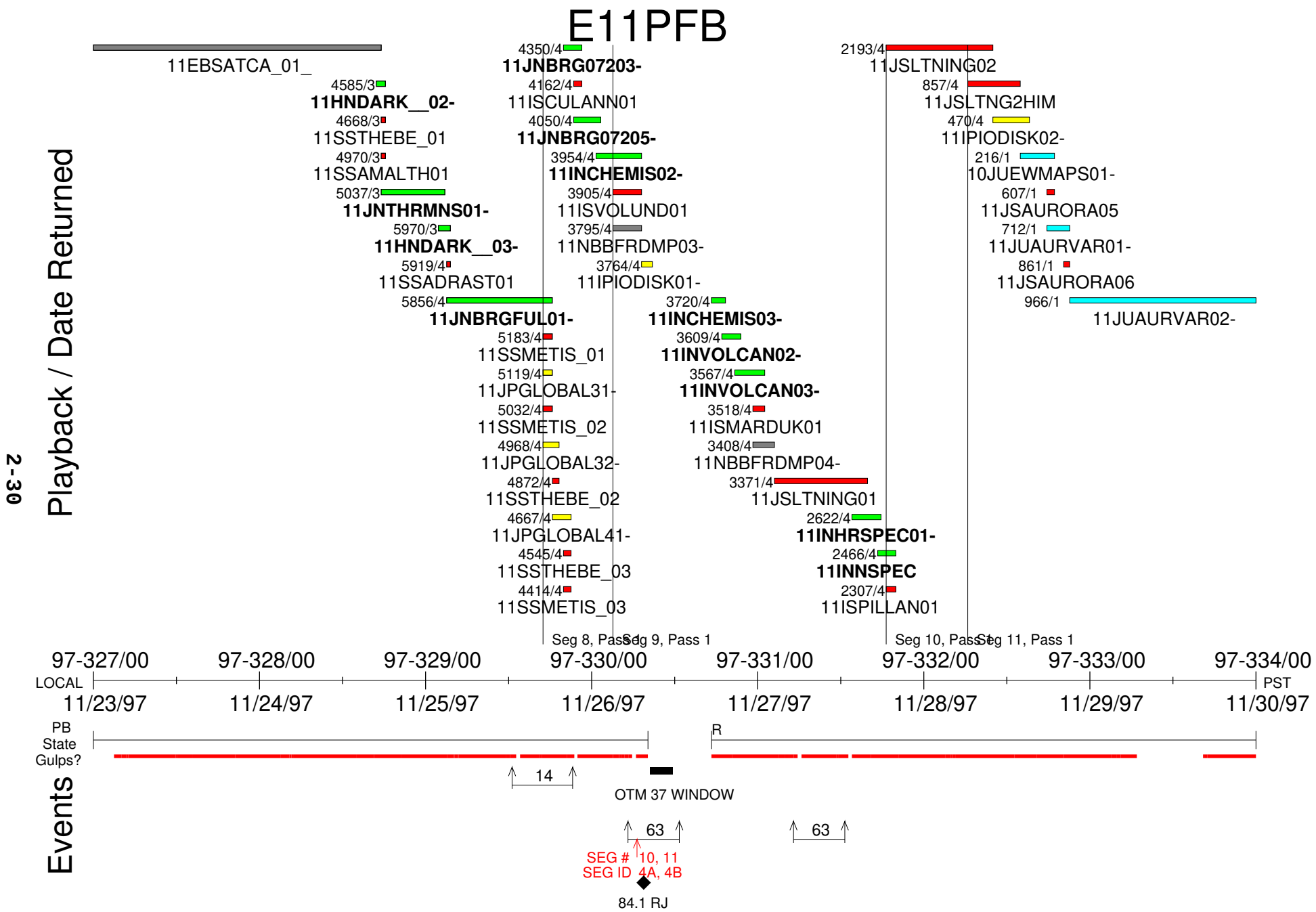
E11PFB
Playback / Date Returned
2-30
11EBSATCA_01_
4585/3
11HNDARK__02-
4668/3
11SSTHEBE_01
4970/3
11SSAMALTH01
5037/3
11JNTHRMNS01-
5970/3
11HNDARK__03-
5919/4
11SSADRAST01
5856/4
11JNBRGFUL01-
5183/4
11SSMETIS_01
5119/4
11JPGLOBAL31-
5032/4
11SSMETIS_02
4968/4
11JPGLOBAL32-
4872/4
11SSTHEBE_02
4667/4
11JPGLOBAL41-
4545/4
11SSTHEBE_03
4414/4
11SSMETIS_03
4350/4
11JNBRG07203-
4162/4
11ISCULANN01
4050/4
11JNBRG07205-
3954/4
11INCHEMIS02-
3905/4
11ISVOLUND01
3795/4
11NBBFRDMP03-
3764/4
11IPIODISK01-
3720/4
11INCHEMIS03-
3609/4
11INVOLCAN02-
3567/4
11INVOLCAN03-
3518/4
11ISMARDUK01
3408/4
11NBBFRDMP04-
3371/4
11JSLTNING01
2622/4
11INHRSPEC01-
2466/4
11INNSPEC
2307/4
11ISPILLAN01
2193/4
11JSLTNING02
857/4
11JSLTNG2HIM
470/4
11IPIODISK02-
216/1
10JUEWMAPS01-
607/1
11JSAURORA05
712/1
11JUAURVAR01-
861/1
11JSAURORA06
966/1
11JUAURVAR02-
Seg 8, Pass 1
Seg 9, Pass 1
Seg 10, Pass 1
Seg 11, Pass 1
97-327/00
97-328/00
97-329/00
97-330/00
97-331/00
97-332/00
97-333/00
97-334/00
LOCAL
PST
11/23/97
11/24/97
11/25/97
11/26/97
11/27/97
11/28/97
11/29/97
11/30/97
PB
State
Gulps?
R
Events
14
OTM 37 WINDOW
63
63
SEG # 10, 11
SEG ID 4A, 4B
84.1 RJ

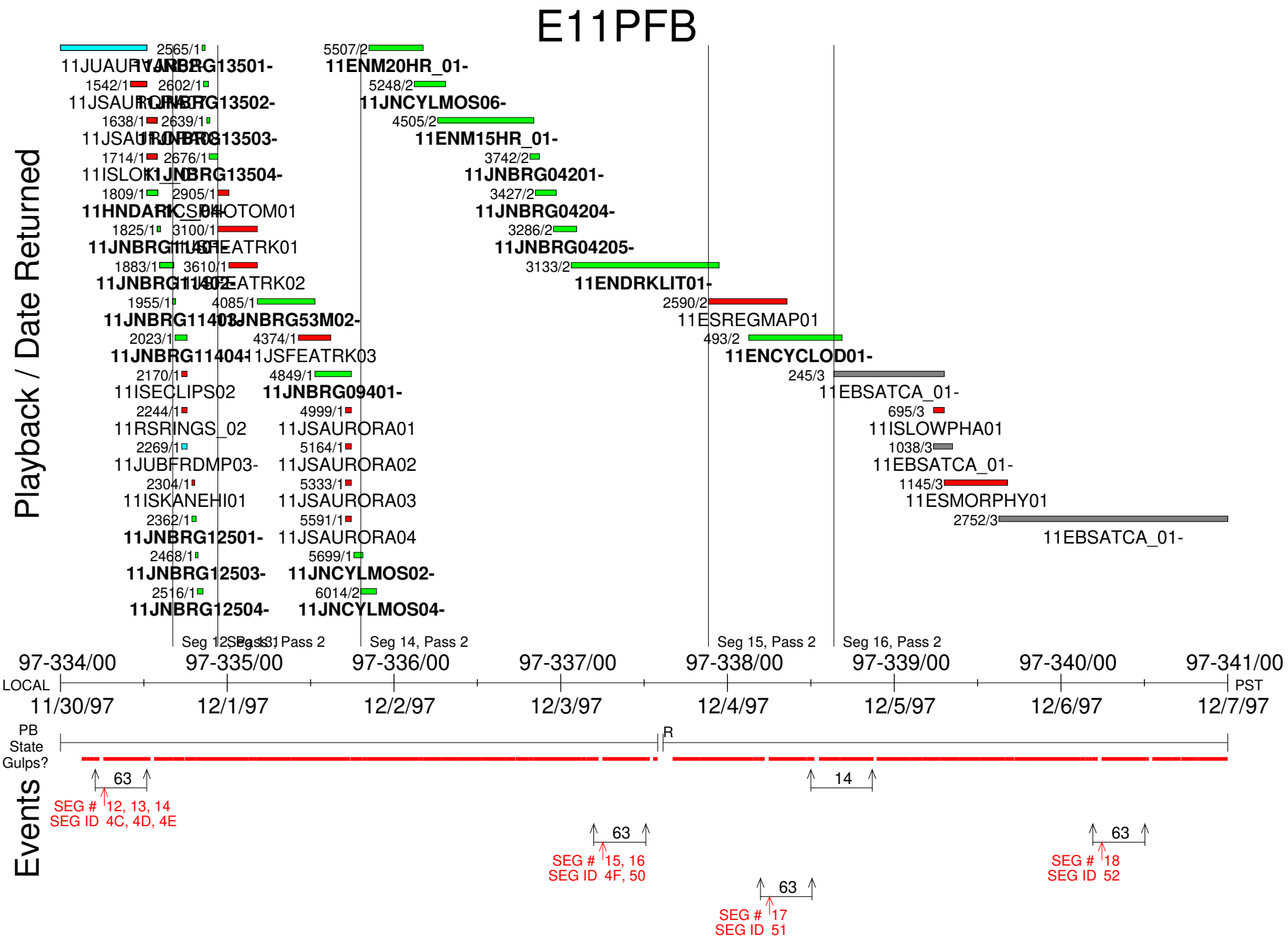
E11PFB
Playback / Date Returned
2565/1
11JUAURORA01
11JNBRG13501-
1542/1
2602/1
11JSAURORA02
11JNBRG13502-
1638/1
2639/1
11JSAURORA03
11JNBRG13503-
1714/1
2676/1
11ISLOKI_01
11JNBRG13504-
1809/1
2905/1
11HNDARK_04
11JNBRG11401-
1825/1
3100/1
11JNBRG11402-
1883/1
3610/1
11JNBRG11403-
1955/1
4085/1
11JNBRG11404-
2023/1
4374/1
11JNBRG11404-
2170/1
4849/1
11ISECLIPS02
11JNBRG09401-
2244/1
4999/1
11RSRINGS_02
11JSAURORA01
2269/1
5164/1
11JUBFRDMP03-
11JSAURORA02
2304/1
5333/1
11ISKANEHI01
11JSAURORA03
2362/1
5591/1
11JNBRG12501-
11JSAURORA04
2468/1
5699/1
11JNBRG12503-
11JNCYLMOS02-
2516/1
6014/2
11JNBRG12504-
11JNCYLMOS04-
5507/2
11ENM20HR_01-
5248/2
11JNCYLMOS06-
4505/2
11ENM15HR_01-
3742/2
11JNBRG04201-
3427/2
11JNBRG04204-
3286/2
11JNBRG04205-
3133/2
11ENDRKLIT01-
2590/2
11ESREGMAP01
493/2
11ENCYCLOD01-
245/3
11EBSATCA_01-
695/3
11ISLOWPHA01
1038/3
11EBSATCA_01-
1145/3
11ESMORPHY01
2752/3
11EBSATCA_01-
Seg 12, Pass 1
Seg 13, Pass 2
Seg 14, Pass 2
Seg 15, Pass 2
Seg 16, Pass 2
97-334/00
97-335/00
97-336/00
97-337/00
97-338/00
97-339/00
97-340/00
97-341/00
LOCAL
PST
11/30/97
12/1/97
12/2/97
12/3/97
12/4/97
12/5/97
12/6/97
12/7/97
PB
State
Gulps?
R
Events
63
SEG # 12, 13, 14
SEG ID 4C, 4D, 4E
14
63
SEG # 15, 16
SEG ID 4F, 50
63
SEG # 17
SEG ID 51
63
SEG # 18
SEG ID 52
ORPROs Loaded: orpro.e11bel
Wed Nov 5 22:54:36 1997, Page 4 of 6

E11PFB

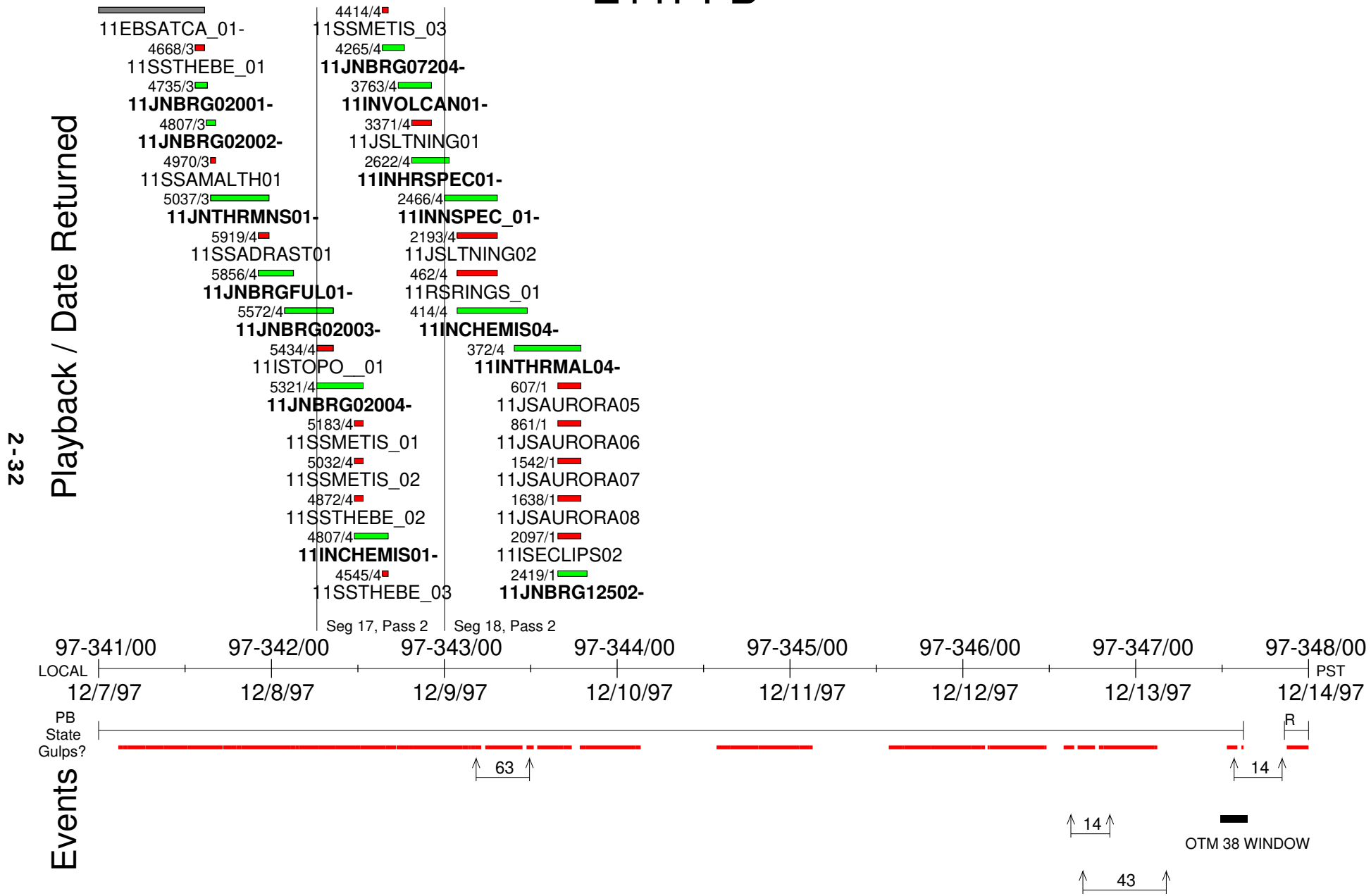
Playback / Date Returned
11EBSATCA_01-
4668/3
11SSTHEBE_01
4735/3
11JNBRG02001-
4807/3
11JNBRG02002-
4970/3
11SSAMALTH01
5037/3
11JNTHRMNS01-
5919/4
11SSADRAST01
5856/4
11JNBRGFUL01-
5572/4
11JNBRG02003-
5434/4
11ISTOPO__01
5321/4
11JNBRG02004-
5183/4
11SSMETIS_01
5032/4
11SSMETIS_02
4872/4
11SSTHEBE_02
4807/4
11INCHEMIS01-
4545/4
11SSTHEBE_03
4414/4
11SSMETIS_03
4265/4
11JNBRG07204-
3763/4
11INVOLCAN01-
3371/4
11JSLTNING01
2622/4
11INHRSPEC01-
2466/4
11INNSPEC_01-
2193/4
11JSLTNING02
462/4
11RSRINGS_01
414/4
11INCHEMIS04-
372/4
11INTHRMAL04-
607/1
11JSAURORA05
861/1
11JSAURORA06
1542/1
11JSAURORA07
1638/1
11JSAURORA08
2097/1
11ISECLIPS02
2419/1
11JNBRG12502-
Seg 17, Pass 2
Seg 18, Pass 2
97-341/00
97-342/00
97-343/00
97-344/00
97-345/00
97-346/00
97-347/00
97-348/00
LOCAL
PST
12/7/97
12/8/97
12/9/97
12/10/97
12/11/97
12/12/97
12/13/97
12/14/97
Events
PB
State
Gulps?
R
63
14
14
43
OTM 38 WINDOW

2-32

E11PFB

Playback / Date Returned

2-33

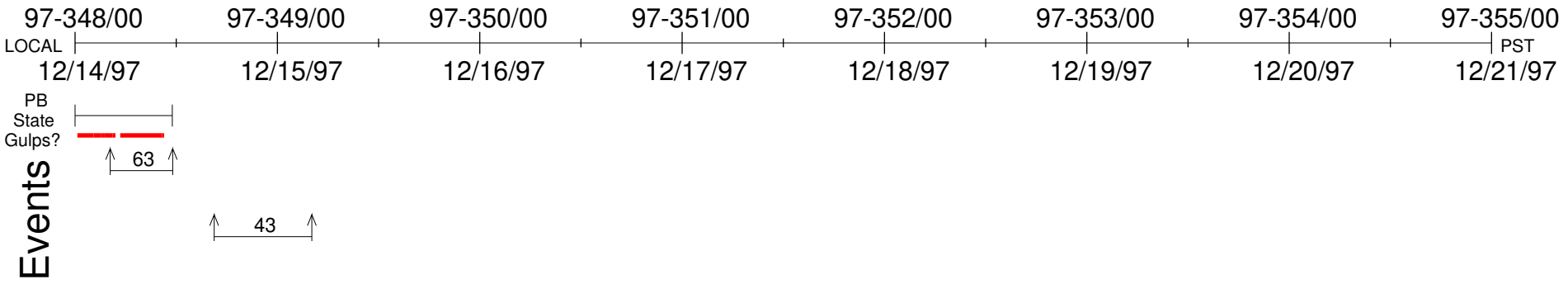

Events

E11 NIMS A

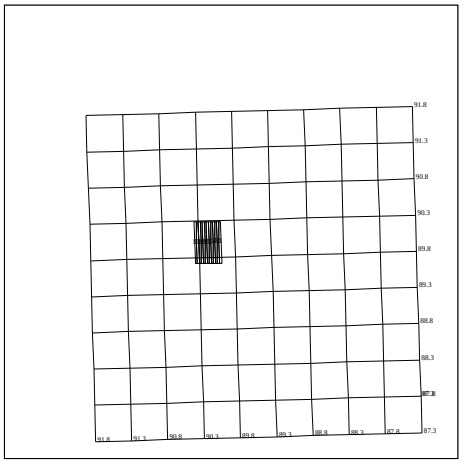

11HNDARK__01
97-309/07:15:17

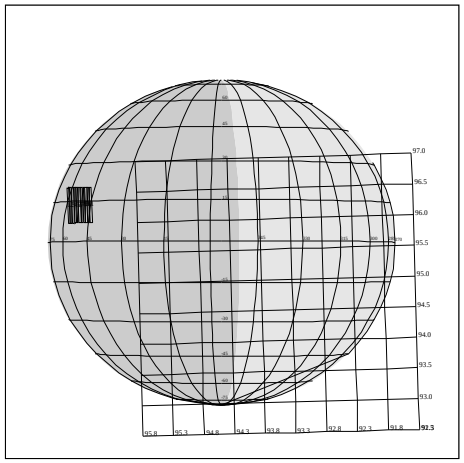

11JNBRG53M01
97-309/16:10:10

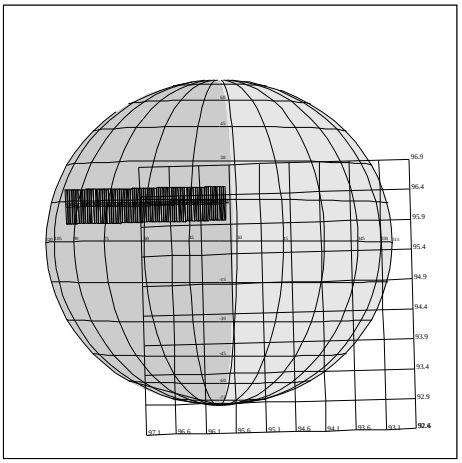

11JNBRG53M02
97-309/17:15:53

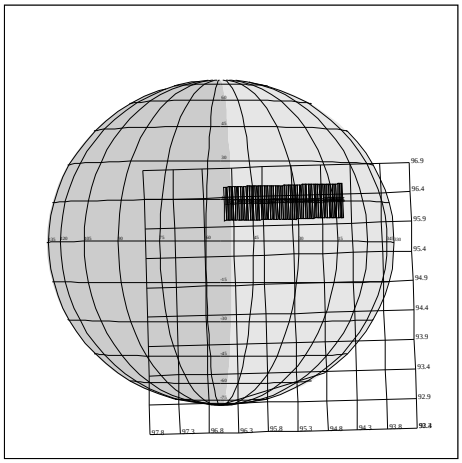

11JNBRG09401
97-309/17:52:17

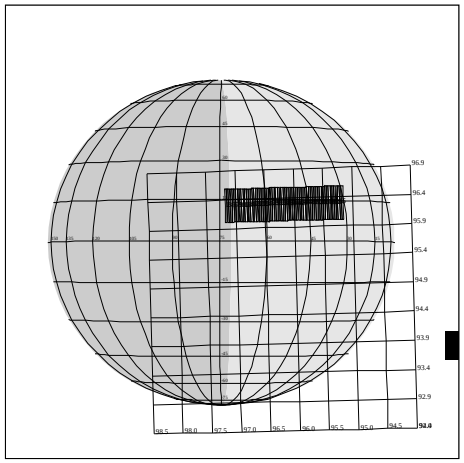

11JNBRG09402
97-309/18:25:39

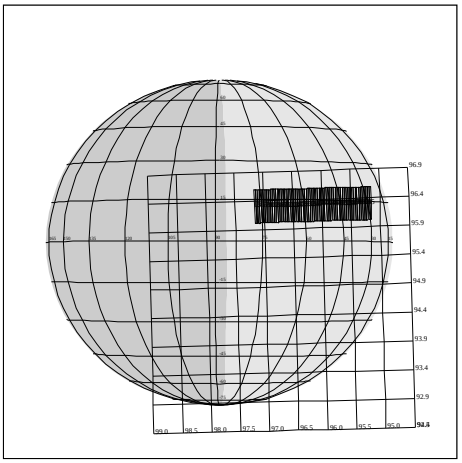

11JNBRG09403
97-309/18:49:55

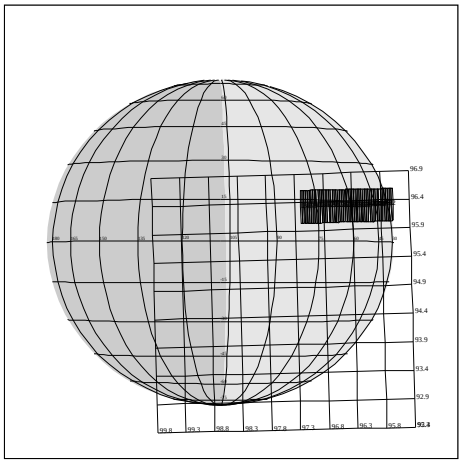

11JNBRG09404
97-309/19:23:17

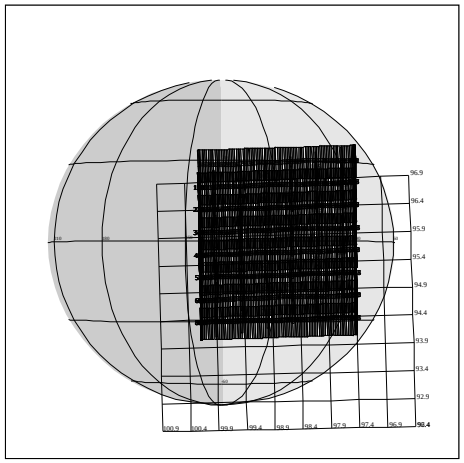

11JNCYLMOS01
97-309/20:14:51

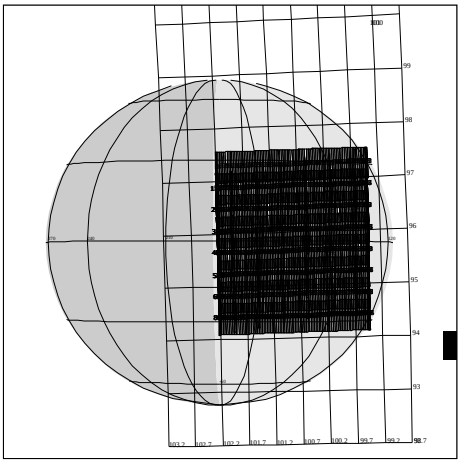

11JNCYLMOS02
97-309/21:48:53

E11 NIMS B

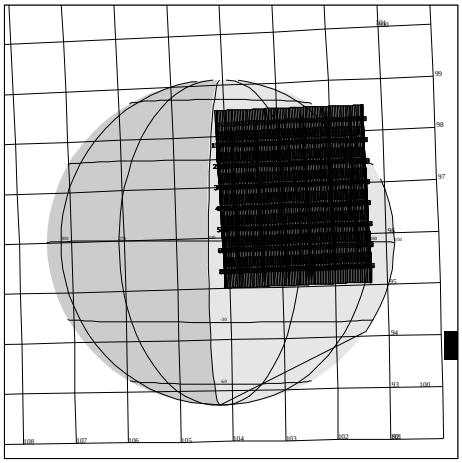

11JNCYLMOS03
97-309/23:01:41

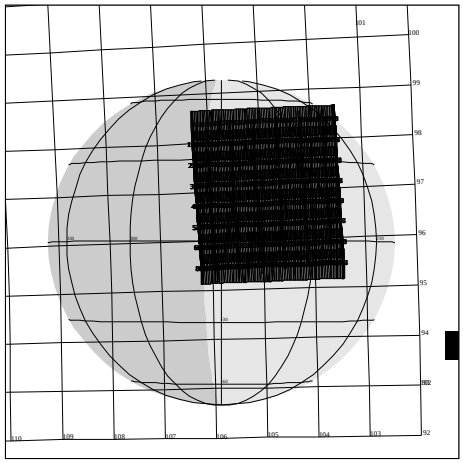

11JNCYLMOS04
97-310/00:01:21

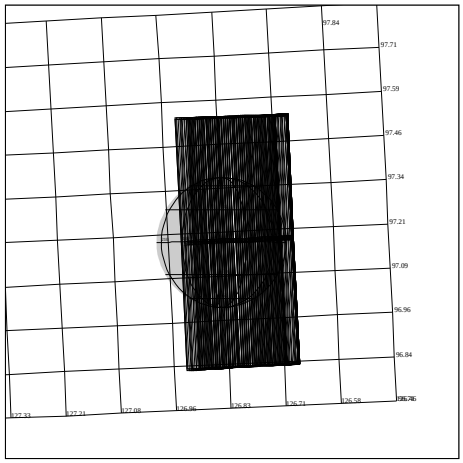

11ENM20HR_01
97-310/00:15:30

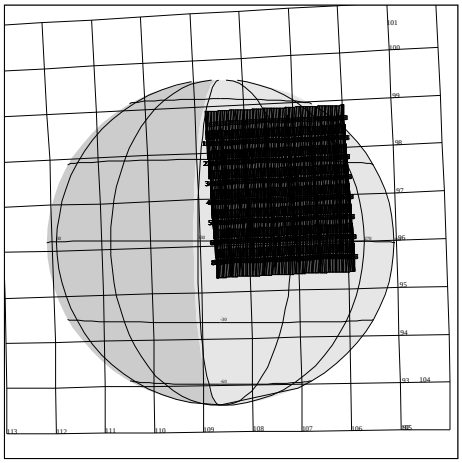

11JNCYLMOS05
97-310/01:32:21

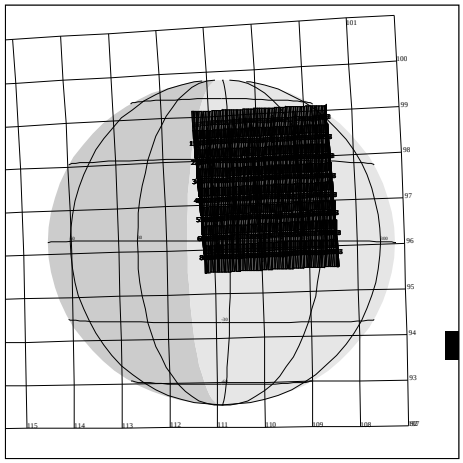

11JNCYLMOS06
97-310/02:42:07

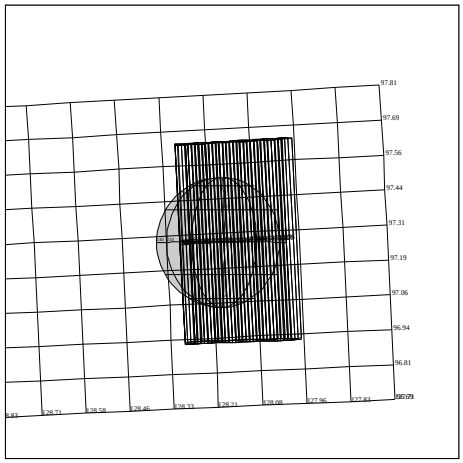

11ENM17HR_01
97-310/02:57:17

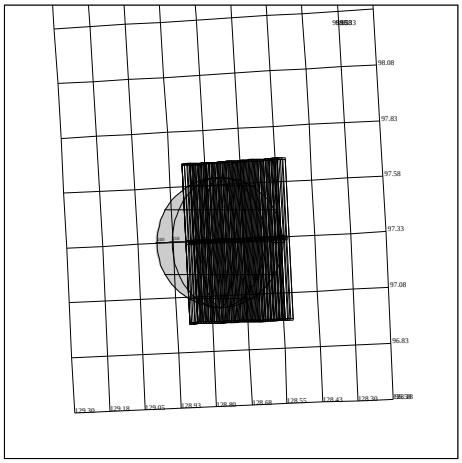

11ENM15HR_01
97-310/05:20:51

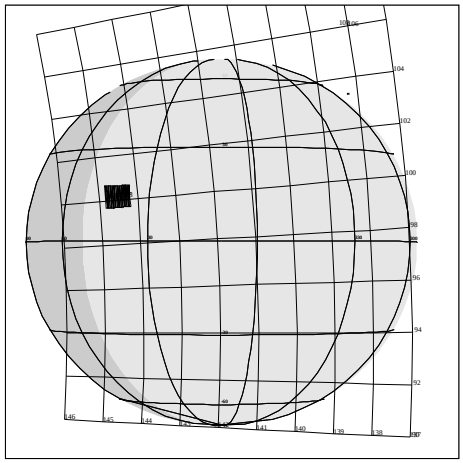

11JNRTBRG_01
97-310/13:39:20

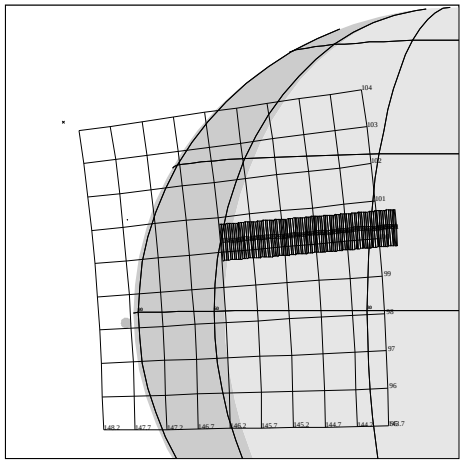

11JNBRG04201
97-310/13:53:29

E11 NIMS C

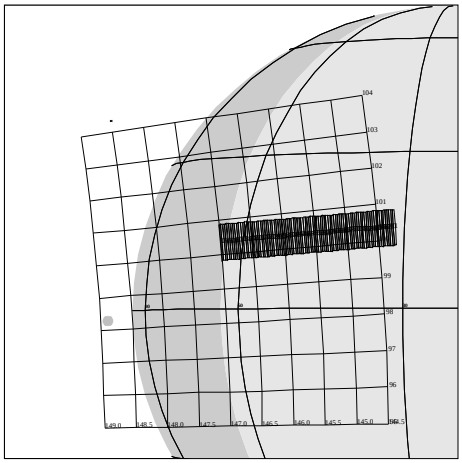

11JNBRG04202
97-310/14:02:35

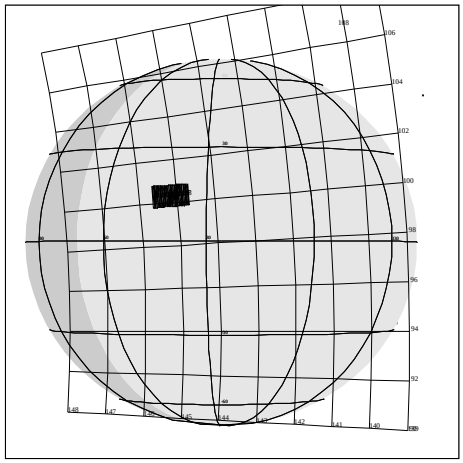

11JNRTBRG_02
97-310/14:13:34

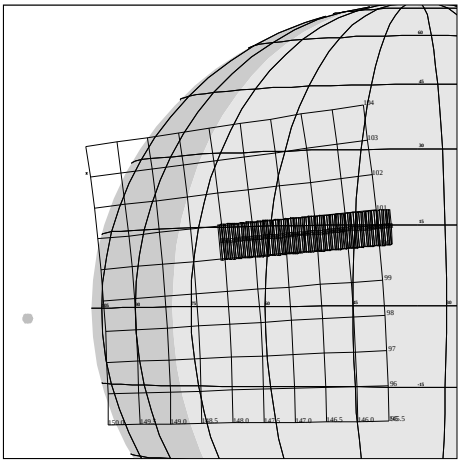

11JNBRG04203
97-310/14:29:53

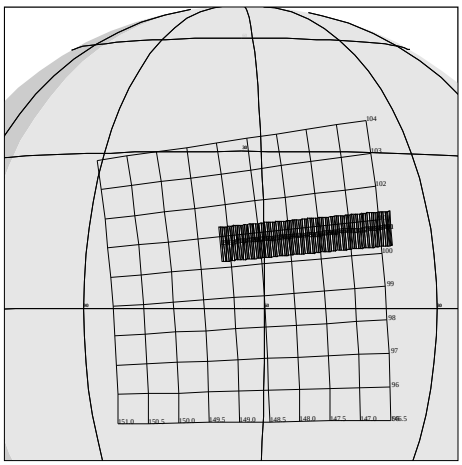

11JNBRG04204
97-310/15:24:29

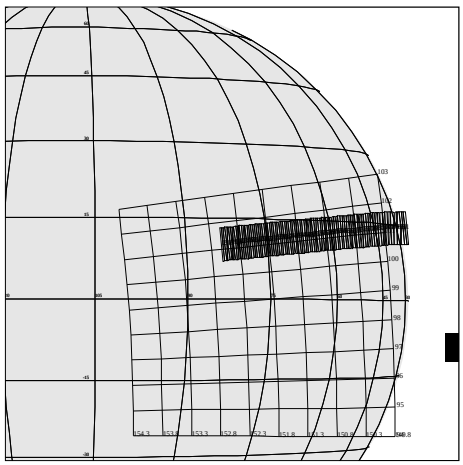

11JNBRG04205
97-310/16:46:23

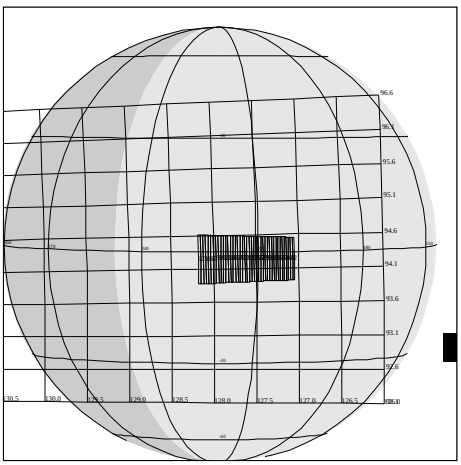

11ENDRKLIT01
97-310/18:46:43

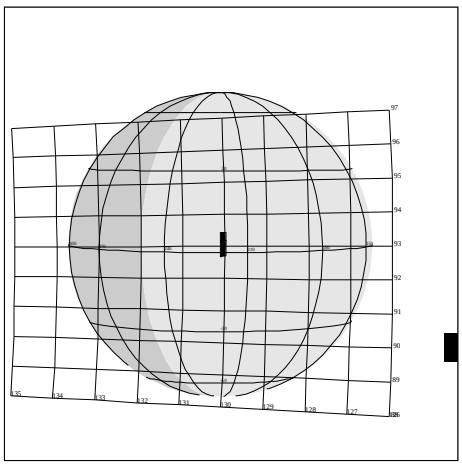

11ENEURORT01
97-310/19:15:01

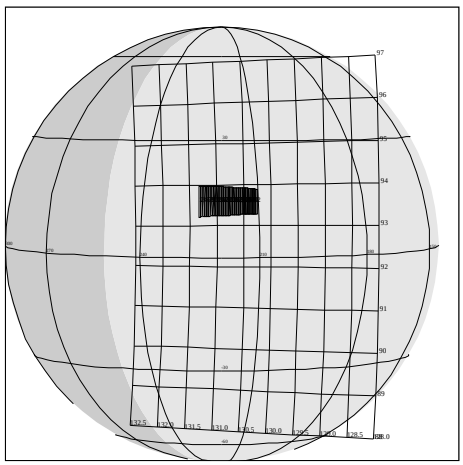

11ENCYCLOD01
97-310/19:25:08

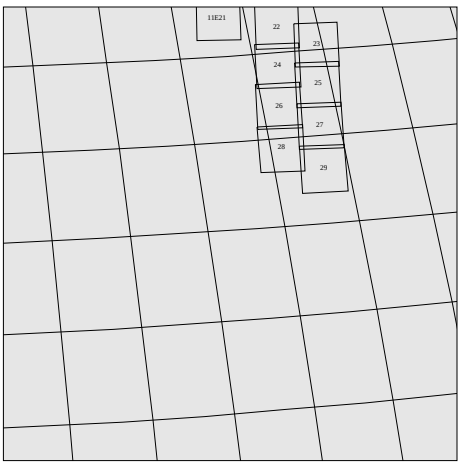

11ENLEADRT01
97-310/20:36:55

E11 NIMS D

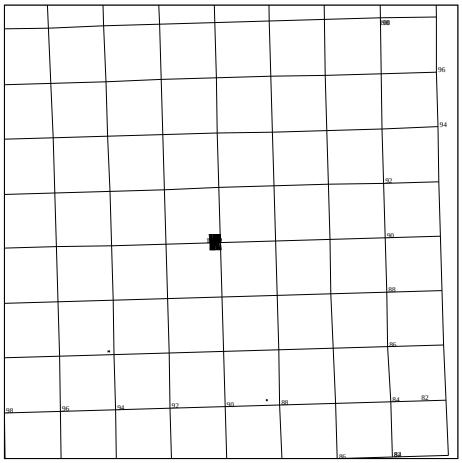

11HNDARK__02
97-310/23:23:45

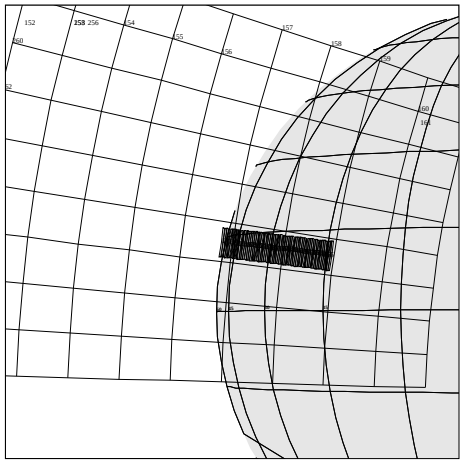

11JNBRG02001
97-311/00:12:17

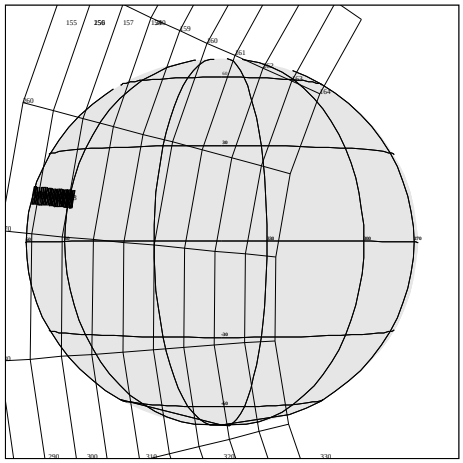

11JNRTBRG_03
97-311/00:23:25

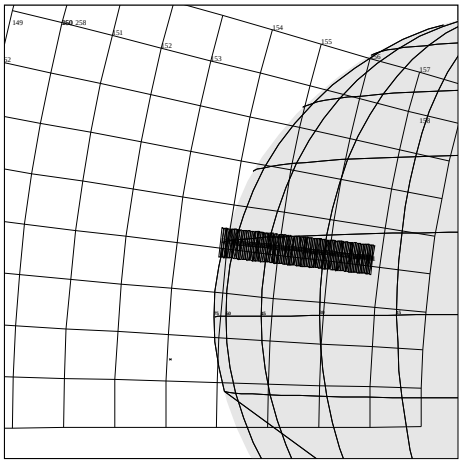

11JNBRG02002
97-311/00:44:39

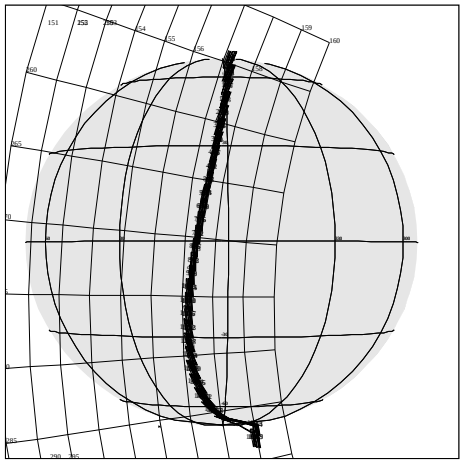

11JNTHRMNS01
97-311/01:01:50

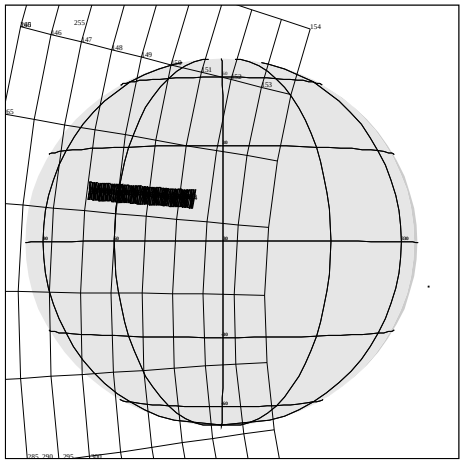

11JNBRGSUB01
97-311/01:58:27

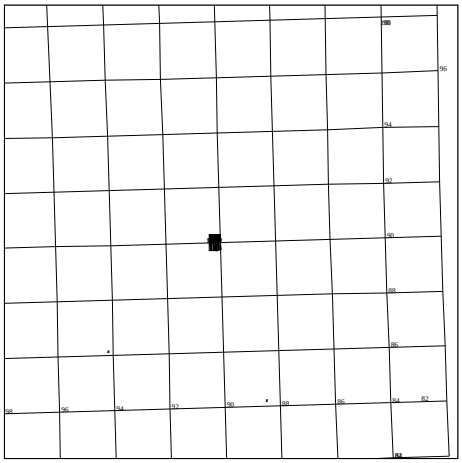

11HNDARK__03
97-311/02:27:47

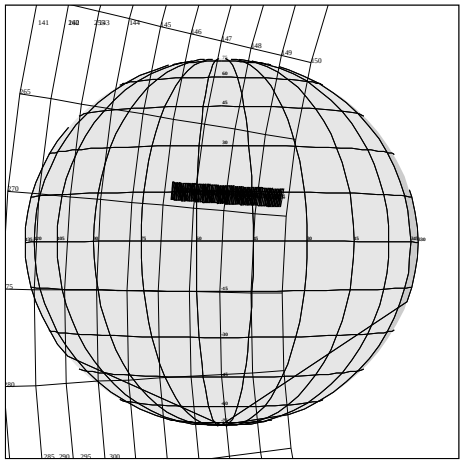

11JNBRGFUL01
97-311/02:43:57

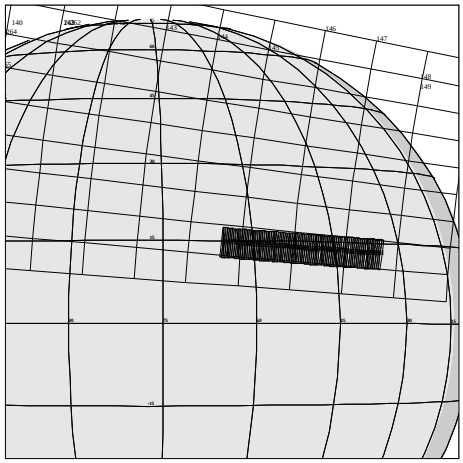

11JNBRG02003
97-311/03:31:29

E11 NIMS E

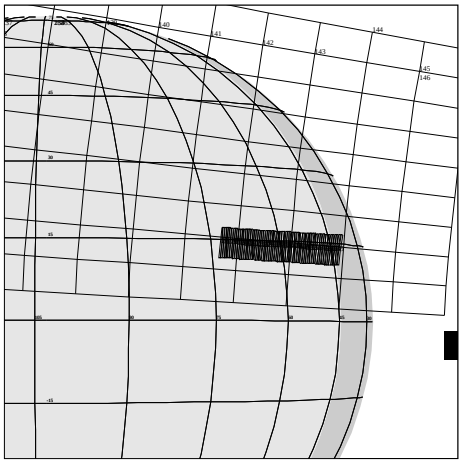

11JNBRG02004
97-311/04:22:02

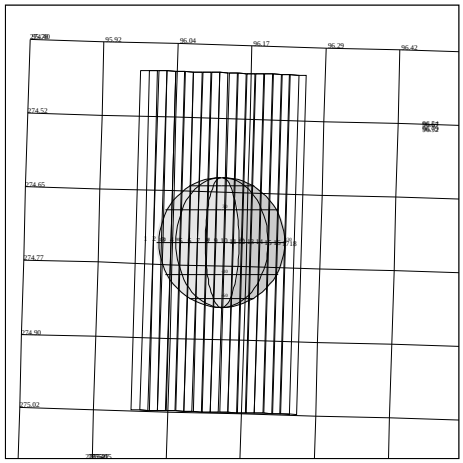

11INCHEMIS01
97-311/07:42:14

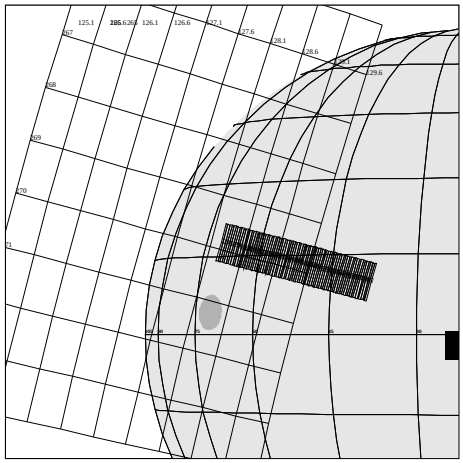

11JNBRG07203
97-311/13:08:49

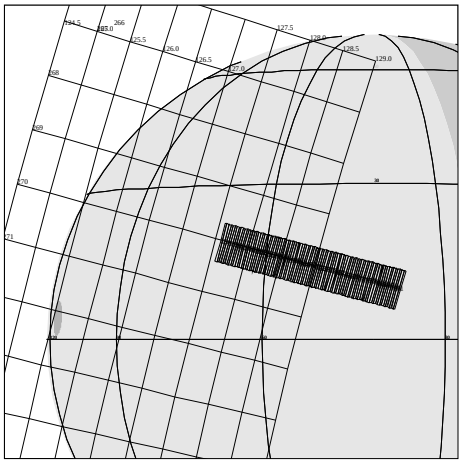

11JNBRG07204
97-311/13:49:16

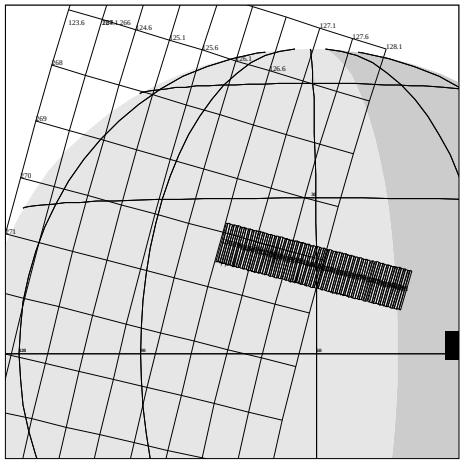

11JNBRG07205
97-311/14:21:37

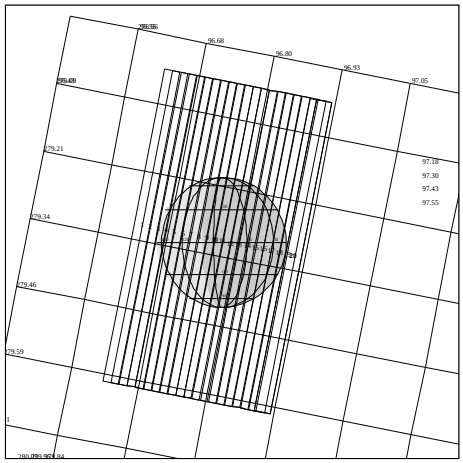

11INCHEMIS02
97-311/16:09:49

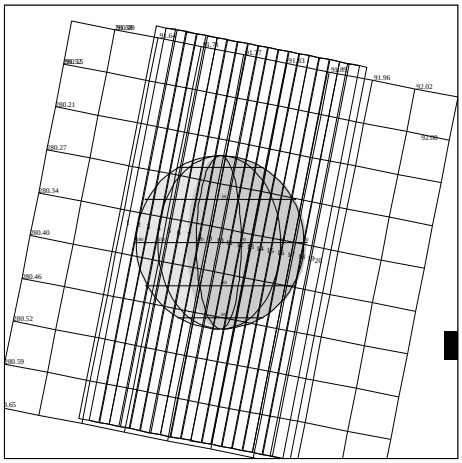

11INVOLCAN01
97-311/19:10:48

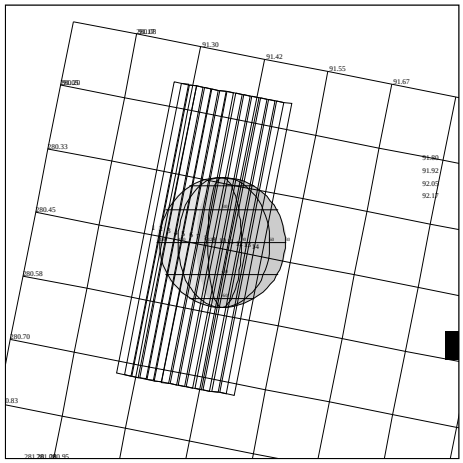

11INCHEMIS03
97-311/19:45:11

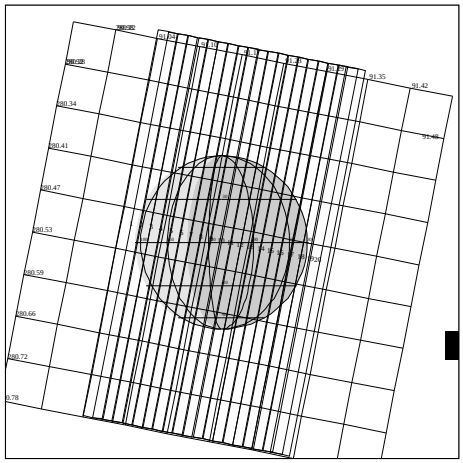

11INVOLCAN02
97-311/20:10:27

E11 NIMS F

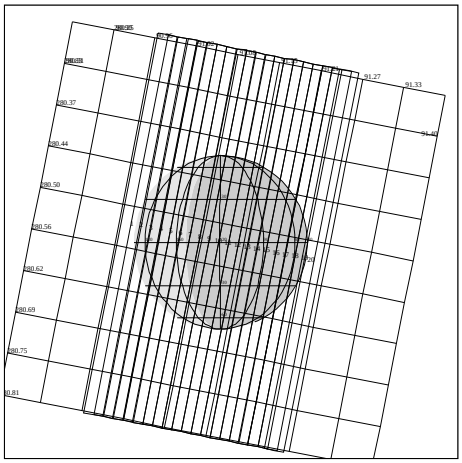

11INVOLCAN03
97-311/21:09:06

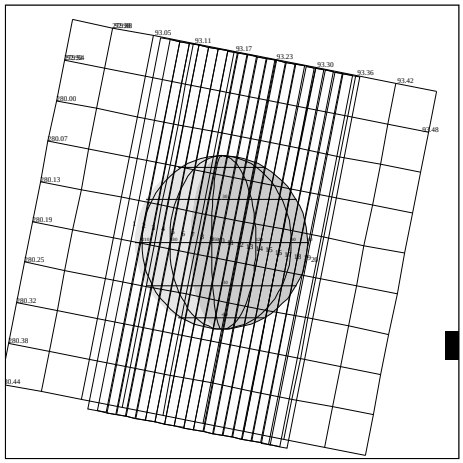

11INHRSPEC01
97-311/23:40:46

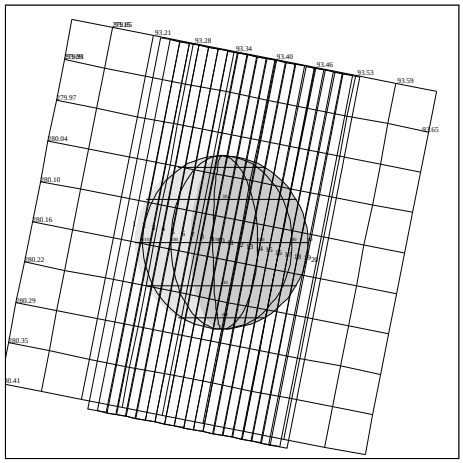

11INNSPEC_01
97-311/23:48:51

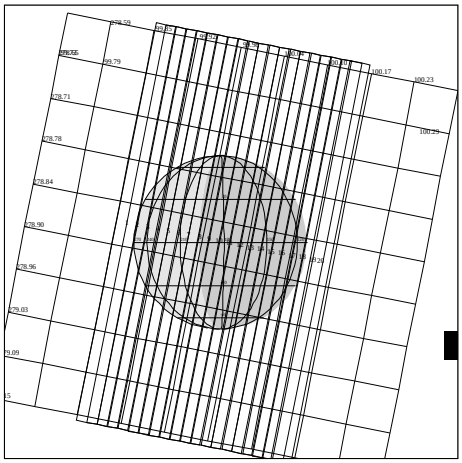

11INCHEMIS04
97-312/03:29:16

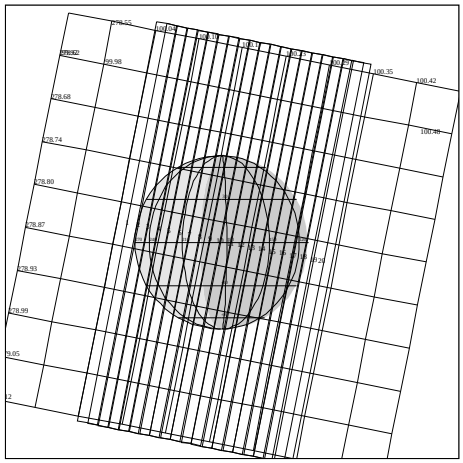

11INTHRMAL04
97-312/03:35:20

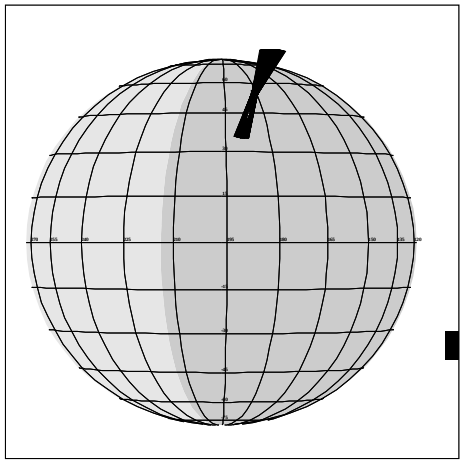

11JNAURVAR01
97-312/04:57:15

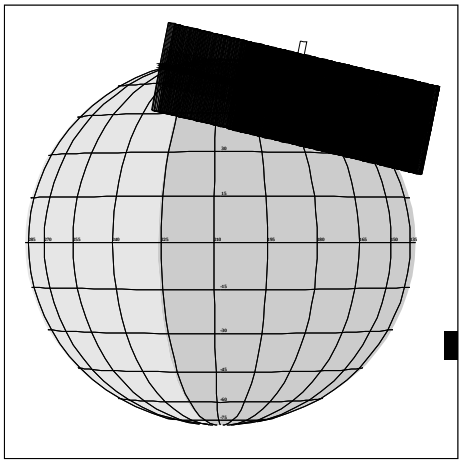

11JNAURVAR02
97-312/05:18:29

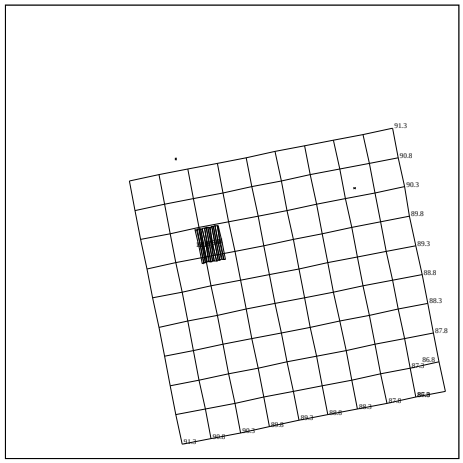

11HNDARK__04
97-312/08:02:17

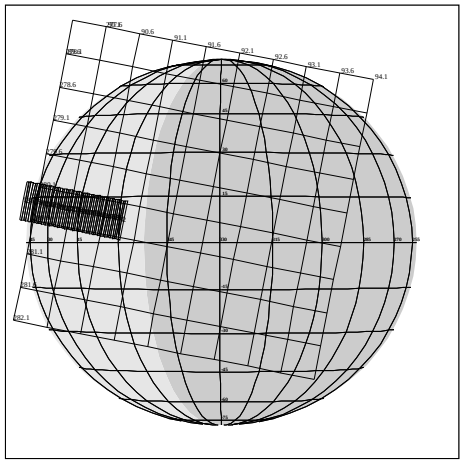

11JNBRG11401
97-312/08:41:43

E11 NIMS G

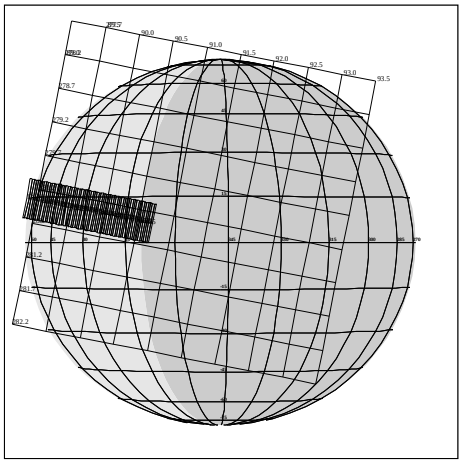

11JNBRG11402
97-312/09:12:03

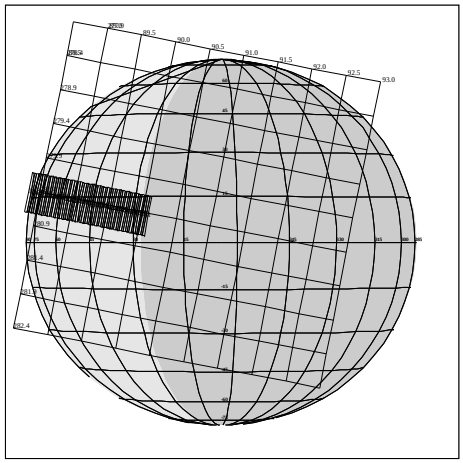

11JNBRG11403
97-312/09:41:22

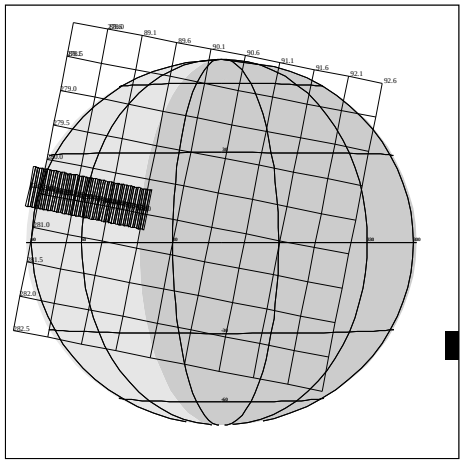

11JNBRG11404
97-312/10:01:35

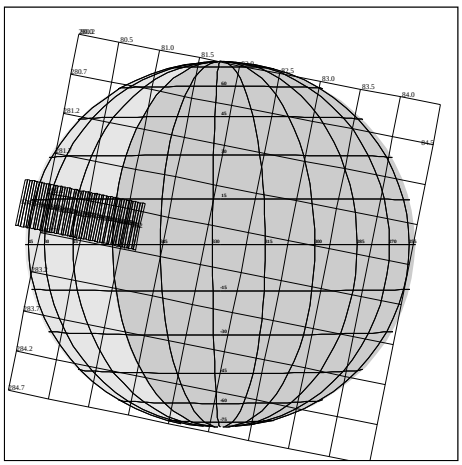

11JNBRG12501
97-312/18:52:25

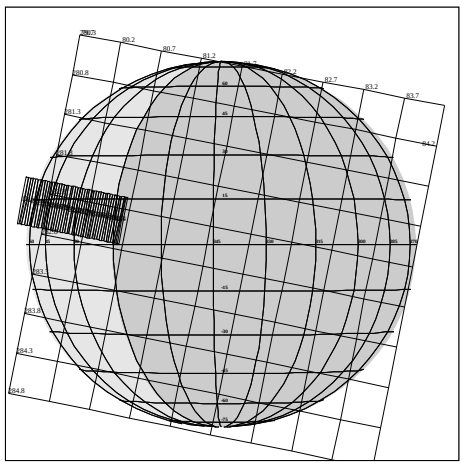

11JNBRG12502
97-312/19:16:41

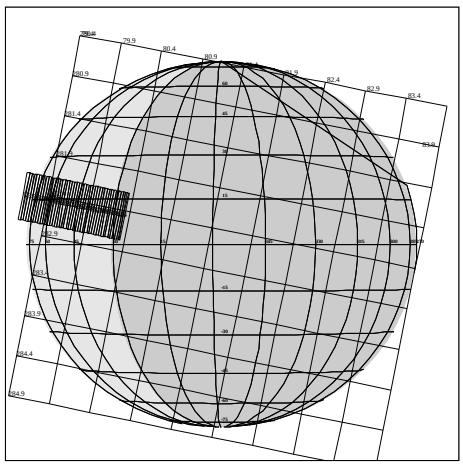

11JNBRG12503
97-312/19:41:58

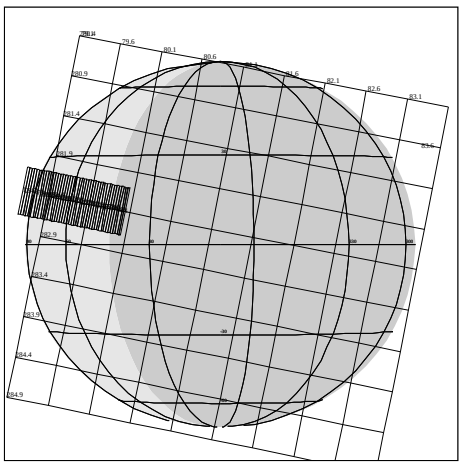

11JNBRG12504
97-312/20:02:11

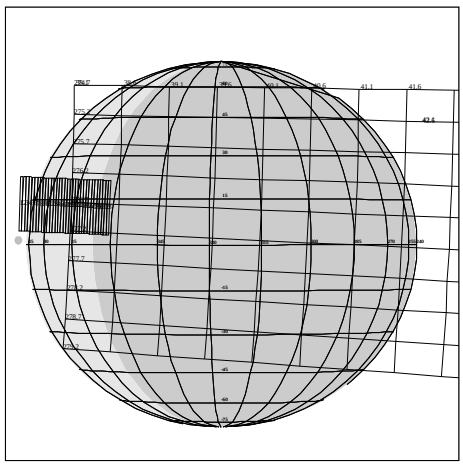

11JNBRG13501
97-313/04:57:04

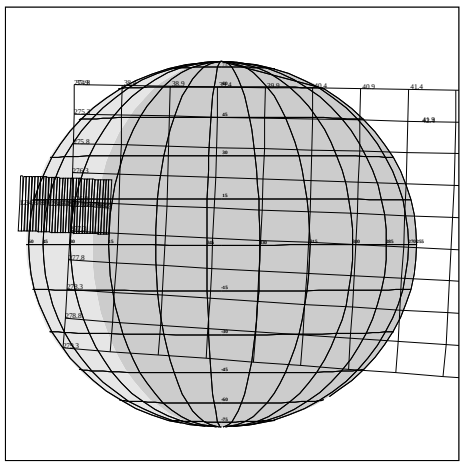

11JNBRG13502
97-313/05:21:20

E11 NIMS H

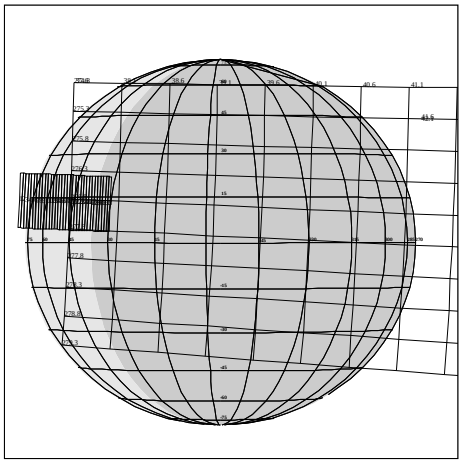

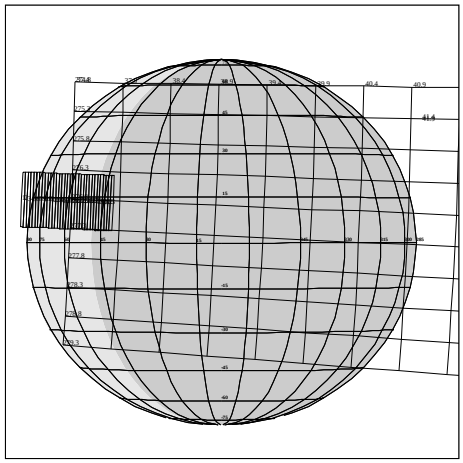

11JNBRG13503
97-313/05:46:37

11JNBRG13504
97-313/06:06:50